installation and servicing

Falcon GTE

Your Ideal installation and servicing guide

spares & parts online
IBASIS.co.uk©

GTE 4, GTE 5, GTE 6, GTE 7 & GTE 8

9486-3041A

When replacing any part on this appliance, use only spare parts that you can be assured conform to the safety and performance specification that we require. Do not use reconditioned or copy parts that have not been clearly authorised by Ideal Boilers.

Ideal BOILERS
ENGINEERED FOR PEACE OF MIND

Table 1 Performance Data

Boiler		GTE4	GTE5	GTE6	GTE7	GTE8
Number of Sections		4	5	6	7	8
Maximum	kW	50	64	78	92	102
Heat Ouptut	Btu/hx10³	170	218	266	314	348
Minimum	kW	36	50	64	78	92
Heat Output	Btu/hx10³	123	170	218	266	314
Hydraulic	mbar	20.3	33.3	49.3	68.4	84.0
Resistance at 11k	in w.g.	8.1	13.3	19.7	27.4	33.6
Hydraulic	mbar	6.1	10.1	14.9	20.7	25.4
Resistance at 20k	in w.g.	2.5	4.0	6.0	8.3	10.2
Combustion Chamber	mbar	0.4	0.6	0.6	0.6	0.8
Resistance (at zero draught)	in w.g.	0.16	0.24	0.24	0.24	0.32
Minimum Draught at Smokehood	mbar	0	0	0	0	0
Outlet (for max. output)	in w.g.	0	0	0	0	0

Oil

Maximum Gross	l/h	5.61	7.18	8.80	10.38	11.51
Oil Rate	gal/h	1.23	1.58	1.93	2.27	2.52
Maximum Flue	m³/s	0.031	0.040	0.049	0.058	0.064
Gas Volume	ft³/min	66	85	104	123	136
Flue Gas CO_2 / Temperature	% / °C	12 / 200	12 / 200	12 / 200	12 / 200	12 / 200

Gas

Maximum	m³/h	5.58	7.16	8.78	10.33	11.48
Gas Rate	ft³/h	197.5	252.8	309.8	365.4	405.1
Maximum Flue	m³/s	0.032	0.042	0.051	0.061	0.067
Gas Volume	ft³/min	69	89	109	128	142
Flue Gas CO_2 / Temperature	% / °C	9 / 200	9 / 200	9 / 200	9 / 200	9 / 200

Table 2 General Data

Flow Connection		R 1 ¼"	R 1 ¼"	R 1 ½"	R 1 ½"	R 1 ½"
Return Connection		R 1 ¼"	R 1 ¼"	R 1 ½"	R 1 ½"	R 1 ½"
Maximum Operating Pressure	bar	4	4	4	4	4
Boiler Thermostat Setting	°C	30-90	30-90	30-90	30-90	30-90
Safety Thermostat Setting	°C	110	110	110	110	110
Nominal Flue	mm	153	153	180	180	180
Diameter	in.	6	6	7	7	7
Boiler Water	l	36	43	50	57	64
Content	gal	7.9	9.5	11.0	12.5	14.1
Boiler DRY Weight	kg	218	257	297	336	375
less Burner Unit	lb	480	566	654	740	825

Note.

Fuel rates and flue gas data relate to maximum output ratings. Gas firing data relates to the use of NATURAL GAS ONLY.

Details for the use of LPG are available on request from **Caradon Ideal Ltd.**

Natural gas consumption is calculated using a calorific value of 38.7MJ/m³ (1038Btu/ft³) gross or 34.9MJ/m³ (935Btu/ft³) nett at 15°C and 1013.25mbar.

Oil rates relate to Gas Oil using a calorific value of 45.56 MJ/kg gross or 42.69 MJ/kg nett.

HEALTH & SAFETY DOCUMENT NO. 635

The electricity at work regulations, 1989. The manufacturer's notes must NOT be taken, in any way, as overriding statutory obligations.

IMPORTANT. These appliances are CE certified for safety and performance. It is, therefore, important that no external control devices, e.g. flue dampers, economisers etc., are directly connected to these appliances unless covered by these Installation and Servicing Instructions or as otherwise recommended by **Caradon Ideal Limited** in writing. If in doubt please enquire.

Any direct connection of a control device not approved by **Caradon Ideal Limited** could invalidate the certification and the normal appliance warranty. It could also infringe the Gas Safety Regulations and the above regulations.

CONTENTS

Assembly. 11-22

Boiler Clearances. 6

Burner Connection. 11

Commissioning and Testing. ..... 26 & 27

Electrical Connections. 22-24

Electrical Supply. 5

Flue Installation. 5

Fluing. 10

Gas Safety Regulations 4

Gas Supply. 5

Hydraulic Resistance. 2

Initial Lighting. 27

Introduction. 3

Installation. 10

Option Kits. 3

Performance Data. 2

Servicing. 28

Ventilation. 7

Water Circulation. 5

Water Connections. 7

Water System Requirements. 8

Water Treatment. 5

Wiring Diagrams. ..... 23 & 24

Falcon GTE

Gas and Fuel Oil

PI No. 0049AT2527

Destination Countries: GB, IE

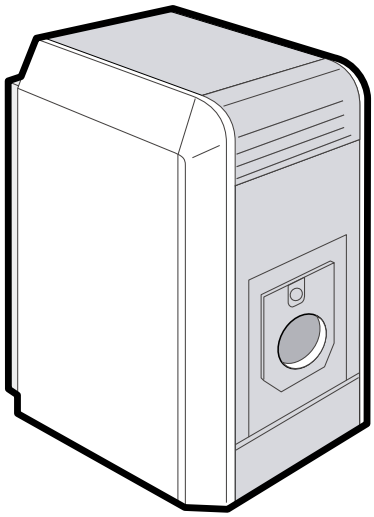

INTRODUCTION

The Falcon GTE boilers are a range of cast iron sectional pressure jet boilers offering high efficiency operation, ease of maintenance, fuel flexibility and low emissions in a compact package. Suitable for oil or gas operation the Falcon GTE range is supplied in a choice of 5 standard models, rated in outputs from 36kW (123,000 Btu/h) to 102kW (348,000 Btu/h) the range has a maximum operating pressure of 4 bar. The GTE 7 and GTE 8 may be high/low operation.

Designed with a large combustion chamber and 3 pass, horizontal flue way incorporating fins and cast iron turbulators, the Falcon GTE ensures maximum heat transfer efficiency (up to 93% net).

The boilers are suitable for: combined indirect pumped domestic hot water and central heating systems; independent indirect pumped domestic hot water or central heating systems.

Fully pumped systems may be open vented or sealed.

The boilers are NOT suitable for:

1. Gravity DHW systems
2. Gravity heating systems
3. Direct domestic hot water supply

Options

Hours run meter (IC8)

Burners with high/low operation are available on Models GTE 7 and GTE 8 with DR31 control panel

CAUTION. To avoid the possibility of injury during the installation, servicing or cleaning of this appliance, care should be taken when handling edges of sheet steel components.

SAFETY

Current Gas Safety (Installation and Use) Regulations or rules in force.

It is law that all gas appliances are installed and serviced by a CORGI registered installer in accordance with the regulations below. Failure to install appliances correctly could lead to prosecution. It is in your own interest, and that of safety, to ensure the law is complied with.

The following must be conformed with:

Current Building Regulations and Clean Air Act

Water Authority Regulations

Local Authority Regulations and Regional Bylaws

Gas Safety Regulations

Any special regional requirements of local Electricity and Gas undertaking.

Fire Service and Insurance Company requirements.

In the interests of safety, a competent installer should be employed to effect the installation of the appliance. Manufacturer's notes must NOT, in any way, be taken as over riding statutory obligations.

The installation of the boiler MUST also be in accordance with the latest I.E.E. (BS7671) Wiring Regulations, local buildings regulations, bye-laws of the local water authority, the building regulations and the Building Standards (Scotland) and any relevant requirements of the local authority.

Detailed recommendations are contained in the following Codes of Practice:

BS 799 Pt4 & 7	Oil burning equipment.
BS 799 Pt5	Oil storage tanks.
BS 5410 Pt1	Installation for space heating and hot water supply.
BS 5440	Installation and maintenance of flues and ventilation for gas appliances of rated input not exceeding 70kW net (1st, 2nd and 3rd family gases).
Part 1	Specification for installation of flues
Part 2	Specification for installation and maintenance of ventilation for gas appliances.
BS 5854	Flues and flue structures in buildings.
BS 5885 Pt1	Gas burners - with inputs 60kW and above.
BS 6644	Installation of gas fired hot water boilers of rated input between 60kW and 2MW (2nd and 3rd family gases).
BS 6798	Installation of gas fired hot water boilers of rated input not exceeding 70kW.
BS 6880	Low temperature hot water heating systems of output greater than 45kW.
Part 1	Fundamental and design considerations
Part 2	Selection of equipment.
Part 3	Installation, commissioning and maintenance.
BS 6891	Installation of low pressure gas pipework of up to 28mm (R1) in domestic premises (2nd family gas).
EN 303.1	Heating boilers with forced draught burners. General requirements.
EN 303.2	Heating boilers with forced draught burners with atomising oil burners.
EN 304	Test code for heating boilers for atomizing oil burners.
73/23 EEC	Low voltage directive. (Relevant standard is EN60335.1)
89336 EEC	Electromagnetic Compatibility Directive. (Relevant standards are EN50081.1, EN50082.1 and EN55014.)
90396 EEC	Gas Devices Directive. (Relevant standards are EN303.1, EN303.2 and EN304.)
92/42 EEC	HH Efficiency Directive.
IGE/UP/1	Soundness testing and purging of industrial and commercial gas installation.
IGE/UP/2	Gas installation pipework, boosters and compressors on industrial and commercial premises.
IGE/UP/10	Installation of gas appliances in industrial and commercial premises.

SAFE HANDLING OF SUBSTANCES

Care should be taken when handling the boiler insulation panels, which can cause irritation to the skin. No asbestos, mercury or CFCs are included in any part of the boiler or its manufacture.

Assembly and Installation Instructions for Ideal Falcon GTE heating boilers should be read in conjunction with the general technical data tables enclosed and any other technical publication supplied with the burner.

NOTE TO THE INSTALLER: LEAVE THESE INSTRUCTIONS ADJACENT TO THE BOILER.

GAS SUPPLY

The local gas supplier should be consulted, at the installation planning stage, in order to establish the availability of an adequate supply of gas. An existing service pipe must NOT be used without prior consultation with the local gas supplier.

A gas meter can only be connected by the local gas supplier or by a registered CORGI engineer.

An existing meter should be checked, preferably by the gas supplier, to ensure that the meter is adequate to deal with the rate of gas supply required. A minimum working gas pressure of 17.5mbar MUST be available at the boiler inlet.

Do not use pipes of smaller size than the burner inlet gas connection.

The complete installation MUST be tested for gas soundness and purged in accordance with the appropriate standards listed on page 4.

FLUE INSTALLATION

IMPORTANT
It is the responsibility of the installer to ensure, in practice, that products of combustion discharging from the terminal cannot re-enter the building or any other adjacent building through ventilators, windows, doors, other sources of natural air infiltration, or forced ventilation / air conditioning.

If this should occur the appliance MUST be turned OFF, labelled as 'unsafe' and corrective action taken.

The flue must be installed in accordance with the appropriate standards listed on page 4.

WATER CIRCULATION SYSTEM

The system pump MUST be connected to the boiler.

The boiler must NOT be used for direct hot water supply. The hot water storage cylinder MUST be of the indirect type.

Single feed, indirect cylinders are not recommended and MUST NOT be used on sealed systems.

The appliances are NOT suitable for gravity central heating nor are they suitable for the provision of gravity domestic hot water.

The hot water cylinder and ancillary pipework, not forming part of the useful heating surface, should be lagged to prevent heat loss and any possible freezing - particularly where pipes run through roof spaces and ventilated underfloor spaces.

The boiler must be vented.

Draining taps MUST be located in accessible positions, which permit the draining of the whole system - including the boiler and hot water storage vessel. They should be at least 1/2" BSP nominal size and be in accordance with BS. 2879.

The central heating system should be in accordance with the relevant standards listed on page 4.

Due to the compact nature of the boiler the heat stored within the castings at the point of shutdown of the burner must be dissipated in order to avoid overheating. In order to allow pump operation after burner shutdown the boiler control box incorporates a pump overrun facility. In order to make use of this, the pump must be supplied from the terminals inside the boiler. Note: for pumps requiring greater than 1.0amp current, they must be connected via a relay.

WATER TREATMENT FOR HOT WATER AND HEATING BOILERS

There is a basic need to treat the water contained in all heating and indirect water systems, particularly open vented systems. It is assumed, incorrectly, that because boilers are operating in conjunction with what is apparently a closed circuit an open vented system will not, under normal circumstances, allow damage or loss of efficiency due to hardness salts and corrosion once the initial charge of water has been heated up a few times.

1mm of lime reduces the heat transfer from metal to water by 10%.

In practice the deposition of these salts is liable to cause noises from the boiler body or even premature boiler failure. Corrosion and the formation of black iron oxide sludge will ultimately result in premature radiator failure.

Open vented systems are not completely sealed from the atmosphere if proper venting and expansion of system water is to be achieved. The same tank is used to fill the system with water and it is through the cold feed pipe that system water expands into the tank when the boiler passes heat into the system.

Conversely, when the system cools, water previously expelled is drawn back from the tank into the system together with a quantity of dissolved oxygen.

Even if leakage from the heating and hot water system is eliminated there will be evaporation losses from the surface of the tank which, depending upon ambient temperature, may be high enough to evaporate a large portion of the system water capacity over a full heating season.

There will always be corrosion within a heating or hot water system to a greater or lesser degree, irrespective of water characteristics, unless the initial fill water from the mains is treated. Even the water in closed systems will promote corrosion unless treated. For the reason stated, **Caradon Ideal Limited** strongly recommend that when necessary the systems is thoroughly cleaned, prior to the use of stable inhibitor, which does not require continual topping up to combat the effects of hardness salts and corrosion on the heat exchangers of the boiler and associated systems.

Caradon Ideal Limited advise contact directly with specialists on water treatment such as:

GE Betz Ltd	or	Fernox Manufacturing Co. Ltd.
Sentinel Division,		Cookson Electronics,
Foundry Lane,		Forsyth Road, Sheerwater
Widnes, Cheshire,		Woking, Surrey,
WA8 8UD		GU21 5RZ
Tel: 0151 424 5351		Tel: 01799 521 133

ELECTRICAL SUPPLY

WARNING This appliance must be earthed.
A 230V - 50Hz mains supply is required, fused at 5amps.

Wiring external to the appliance MUST be in accordance with the current I.E.E. (BS7671) Wiring Regulations and any local regulations which apply.

The point of connection to the mains should be readily accessible and adjacent to the boiler.

LOCATION OF THE BOILER

The boiler must stand on a non-combustible floor (i.e. concrete or brick) which must be flat, level and of a suitable load bearing capacity to support the weight of the boiler (when filled with water) and any ancillary equipment.

If the boiler is mounted on a plinth then the dimensions must exceed the plan area of the boiler by at least 75mm on each side.

The boiler must not be fitted outside.

1 BOILER DIMENSIONS

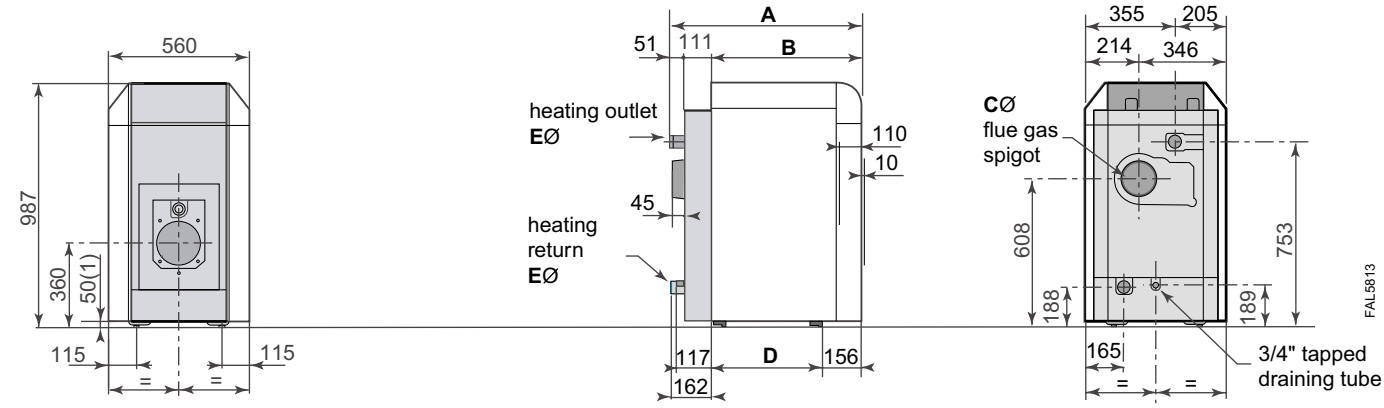

Rp : Tapped
R : Threaded

(1) Adjustable feet: basic height 50mm with 35 to 65mm adjustment range.

Boiler		GTE 4	GTE 5	GTE 6	GTE 7	GTE 8
Dimension A	mm	754	881	1008	1135	1262
Dimension B	mm	592	719	846	973	1100
Dimension C	mm	153	153	180	180	180
Dimension D	mm	423	550	673	800	927
Dimension E	in BSP	R1 1/4"	R1 1/4"	R1 1/2"	R1 1/2"	R1 1/2"

2 BOILER CLEARANCES

The minimum dimensions indicated on the following drawing must be respected to ensure good access around the boiler.

Note.

To allow the inlet of the combustion air, the boiler room must be adequately ventilated, the section and the location of which must comply with local recommendations.

Refer also to Frame 3.

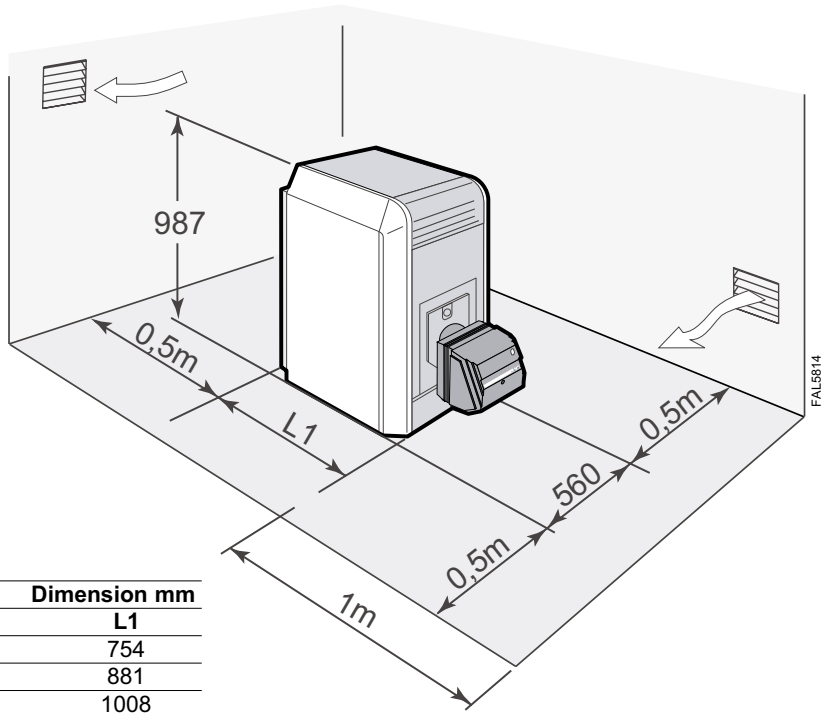

	Dimension mm
Boiler	L1
GTE 4	754
GTE 5	881
GTE 6	1008
GTE 7	1135
GTE 8	1262

3 VENTILATION

Safe, efficient and trouble-free operation of conventionally flued gas boilers is vitally dependent on the provision of an adequate supply of fresh air to the room in which the appliance is installed.

Ventilation by grilles communicating directly with the outside air is required at both high and low levels. The minimum free areas of these grilles must be according to the following scale:

Total input rating of boilers	Position of air vents	Air vent areas (air direct from outside)
Up to 2 MW	HIGH LEVEL	270 cm^2 plus 2.25cm^2 per kW in excess of 60 kW total rated input
	LOW LEVEL	540 cm^2 plus 4.5cm^2 per kW in excess of 60 kW total rated input

Position ventilation grilles to avoid the risk of accidental obstruction by blockage or flooding. If further guidance on ventilation is required then consult BS 6644.

The supply of air by mechanical means to a space housing the boiler should be by mechanical inlet with natural or mechanical extraction. Mechanical extract ventilation with natural inlet must not be used.

Where a mechanical inlet and a mechanical extract system is applied, the design ventilation flow rates should be as in Table 4 of BS 6644.

Note.

For mechanical ventilation systems an automatic control should be provided to cause safety shutdown or lockout of the boiler(s) in the event of failure of air flow in either inlet or extract fans.

IMPORTANT. The use of an extractor fan in the same room as the boiler (or in an adjacent communicating room) can, in certain conditions, adversely affect the safe operation of the boiler.

Where such a fan is already fitted (or if it is intended to fit an extractor fan after installation of the appliance) the advice of the gas supplier should be obtained.

The temperature within a boiler room shall not exceed 25ºC within 100 mm of the floor, 32ºC at mid height and 40ºC within 100 mm of the ceiling.

4 BOILER WATER CONNECTIONS

Flow and return connections are positioned at the rear of the boiler and vary in size depending upon the output model. Refer to Table 2, page 2 for sizes.

The flow and returns are provided with threaded connections.

A ¾" drain connection is provided at the rear bottom of the boiler heat exchanger.

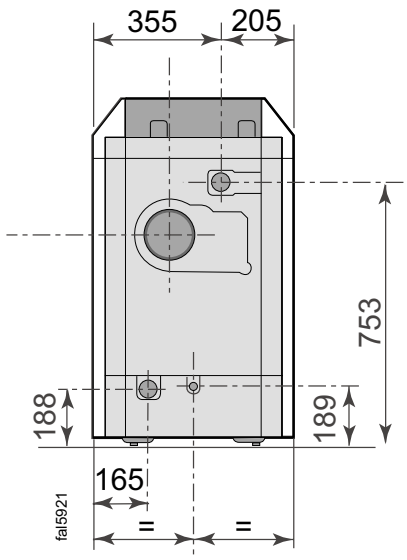

5 FILLING THE SYSTEM

Filling shall be performed with a low flow rate from a low point in the boiler room in order to ensure that all the air in the boiler is bled from the high point of the system.

Always stop the pump before filling.

IMPORTANT. Instructions for starting up the boiler for the first time after the system is fully or partly drained:

If all the air is not bled naturally to an expansion vessel which opens out onto the air, the system must include manual bleeder valves, in addition to automatic bleeder valves with the capability to bleed the system by themselves when it is operating. The manual bleeder valves are used to bleed all the high points of the system and to make sure that the filled system is free of air before the burner is turned on.

General

Recommendations relating to the water system are contained in BS. 5449 and BS. 6880.

6 OPEN VENTED SYSTEM REQUIREMENTS - minimum static head requirements

The Falcon GTE boiler has a minimum static head requirement of 2.5 metres (8 feet approx.) depending on the particular characteristics of the system design (see diagram). The information provided is based on the following assumptions.

1. An open vent/safety pipe connection is made immediately after the flow connection.
2. A cold feed/expansion pipe connection is made to the system return pipe within 0.75m of the boiler return connection.
3. The maximum flow rate through the boiler is based on a temperature difference of 11°C (20°F) at full boiler output with the circulating pump positioned in the flow of the system.
4. The boiler is at the highest point of the system. Systems designed to rise above the flow connections will, of course, automatically require a minimum static head higher than shown.
5. The position of the open vent/safety pipe above the expansion cistern water level is given as a guide only. The final position will depend upon particular characteristics of the system. Pumping over of water into the expansion cistern should be avoided.
6. Both open vent/safety pipe and cold feed/expansion pipes must be of adequate diameter to suit the output of the boiler (see table below).

Boiler Output kW	Open Vent (mm)	Cold Feed (mm)
30 to 60	25	20
60 to 150	32	25

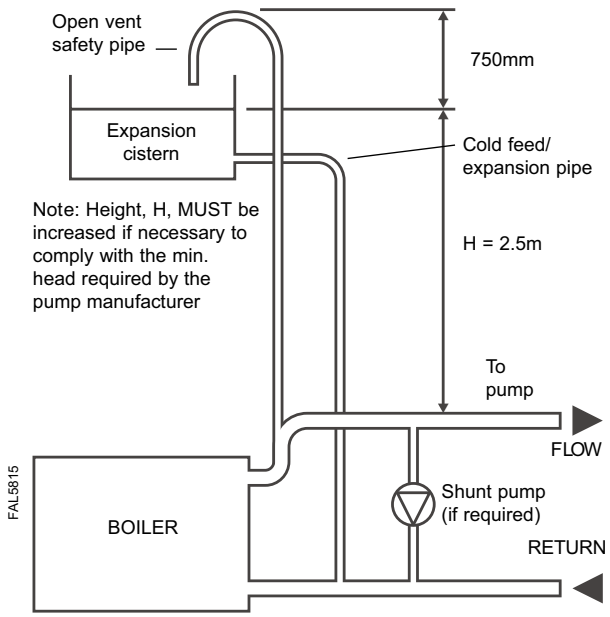

This diagram does not show safety valves & water flow switches etc necessary for safe operation

7 SEALED (PRESSURISED) SYSTEMS

Working pressure 4 bar maximum.

Particular reference should be made to BS. 6644: Section 2; Subsection 11 and Guidance note PM5 "Automatically controlled steam and hot water boilers" published by the Health and Safety Executive.

The information and guidance given below is not intended to override any requirements of either of the above publications or the requirements of the local authority, as or water undertakings.

In general commercial closed pressurised systems are provided with either manual or automatic water make up.

In both instances it will be necessary to fit automatic controls intended to protect the boiler, circulating system and ancillary equipment by shutting down the boiler plant if a potentially hazardous situation should arise.

Examples of such situations are low water level and operating pressure or excessive pressure within the system. Depending on circumstances, controls will need to be either manual or automatic reset. In the event of a shutdown both visual and audible alarms may be necessary.

Expansion vessels used must comply with BS. 4814 and must be sized on the basis of the total system volume and initial charge pressure.

Initial minimum charge pressure should not be less than 0.5 bar (7.2psi) and must take account of the static head and specification of the pressurising equipment. The maximum water temperatures permissible at the point of minimum pressure in the system are specified in Guidance Note PM5.

When make up water is not provided automatically it will be necessary to fit controls which shut down the plant in the event of the maximum system pressure approaching to within 0.35bar (5psi) of the safety valve setting.

other British Standards applicable to commercial sealed systems are:

BS. 6880: Part 2

BS. 1212

BS. 6281: Part 1

BS. 6282: Part 1

BS. 6283: Part 4

8 SYSTEM DESIGN

Minimum Water Flow

Design Flow Rates

The following table gives the flow rate required for each boiler based on a design temperature difference of 11°C (20°F) at the maximum rated output. For hydraulic resistance see General Data table (page 2).

Minimum Flow Rates

It may be necessary to fit a shunt pump to ensure minimum flow rates.

Boiler Size (no of sections)		**4**	**5**	**6**	**7**	**8**
Normal water flow rate	l/s	1.09	1.39	1.69	2.00	2.21
temperature difference 11°C (20°F)	g.p.m.	14.4	18.4	22.3	26.4	29.2
Minimum water flow rate	l/s	0.34	0.44	0.53	0.63	0.70
temperature difference 35°C (63°F)	g.p.m.	4.5	5.8	7.0	8.3	9.3

System Design

Recommendations relating to water system design are contained in BS. 5410: Part 2, BS. 6798 and BS. 6880.

System design must allow for adequate internal circulation within the boiler and sufficient heat release from the boiler body during and immediately after burner firing. Heating and/or hot water controls should be interlocked electrically with the burner, to prevent firing when the system does not demand heat.

Depending on system design it may be necessary to interrupt electrical supply to the burner before any mixing valves are completely closed to the boiler flow. This will dissipate residual heat. Also a pump overrun of at least 5 minutes is required on plant shutdown to avoid interference trip out of the overheat thermostat. If system return temperature remains below 30°C for most of the heating period some protection from condensation is required.

Please contact Caradon Ideal Limited for further information.

Example A - Heating only utilizing a mixing valve

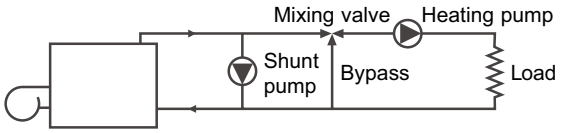

A shunt pump sized on the minimum flow rate required MUST be fitted. Both heating and shunt pumps MUST run on during the overrun period of 5 minutes.
The mixing valve MUST NOT be capable of complete closure to bypass, in order that residual heat can be dissipated.

Example B - Combined domestic hot water and heating using a mixing valve

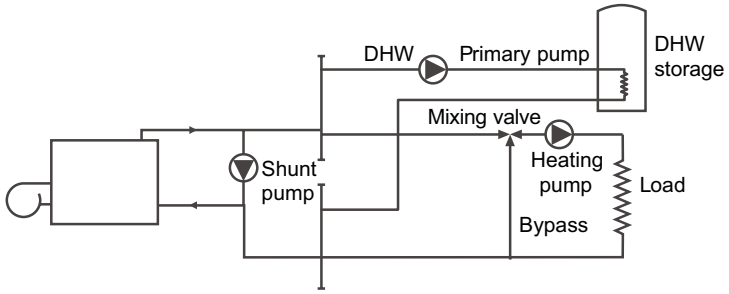

A shunt pump sized on the minimum flow rate required MUST be fitted. Provided adequate heat dissipation can be achieved at all times the shunt and DHW primary pumps only may run on during the overrun period of 5 mins - allowing the heating pump to be switched off. This example assumes the DHW primary pump flow rate required is less than that required for the shunt pump.

Example C - Combined domestic hot water using a diverter valve, and heating using a mixing valve

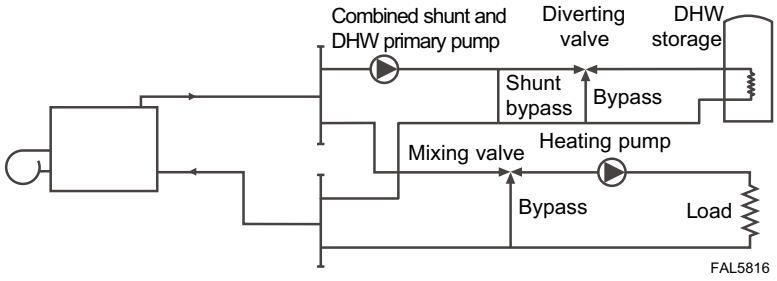

The example assumes flow rate required through the DHW storage cylinder is less than that required by the boiler. A combined shunt/DHW primary pump sized on the minimum flow to be required MUST be fitted. Provided adequate heat dissipation can be achieved at all times the combined pump only may run on during the overrun period - allowing the heating pump to switch off. In order to achieve adequate heat dissipation into the DHW storage cylinder, the diverter valve MUST always open during the overrun period of 5 minutes.

Notes: Minimum static head requirements with limit thermostat set at 100°C (212°F) : 2.5m.
The examples illustrated are intended as a general guide only.
Caradon Ideal Limited will be pleased to advise on specific applications.
Design and minimum flow rate tables are shown in this leaflet.

FLUE OUTLET

9 FLUING

According to the output, the difference between the temperature of the flue gas and the ambient temperature can be as low as 160ºC. The installer will have to respect all of the usual precautions (dilution - piping - T for removal of condensation) in order to prevent deterioration of the chimney.

FLUE SIZE

Refer to applicable regulations while determining the size and height of the flue. Please note that GTE boilers have pressurised and sealed combination chambers and that the pressure at the outlet must not exceed 0 mbar.

Detailed recommendations relating to the design of flues for GAS fired appliances are quoted in BS. 6644 and IGE/UP/10, whilst BS. 5410 Pt. 1 similarly applies to OIL fired boilers.

The table below contains the minimum dimensions of the flue required for each boiler model in order to ensure sufficient draught at the outlet.

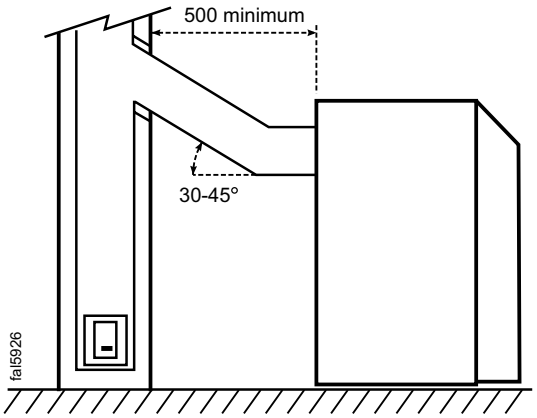

However, care must be taken to comply with any applicable national or local regulations.

Boiler	Heat Output	Required Draught	Mass Flow of Flue Gases kg/s		Flue Gas Temperature (1) (2)	Chimney: Minimum Recommended Dimensions	
	kW	mbar	Fuel Oil 12% CO_2	Natural Gas 9% CO_2	ºC	Ø min mm	Height m
GTE 4	36-50	0	0.025	0.026	200	153	5
GTE 5	50-64	0	0.032	0.033	200	153	5
GTE 6	64-78	0	0.039	0.041	200	180	5
GTE 7	78-92	0	0.047	0.048	200	180	5
GTE 8	92-102	0	0.052	0.053	200	180	5

(1) : at boiler maximum input.
(2) : Boiler temperature: 80ºC (ambient temperature : 20ºC).

10 DIMENSIONAL INFORMATION REQUIRED FOR THE FLUE CONNECTION

Connection

The connection must be made in a competent manner with airtight pipe in a material that is resistant to hot gases from the combustion and possible acid condensation. This pipe must be as short as possible, be removable and without any sudden change in its section.

The diameter must always be at least equal to that of the boiler outlet.

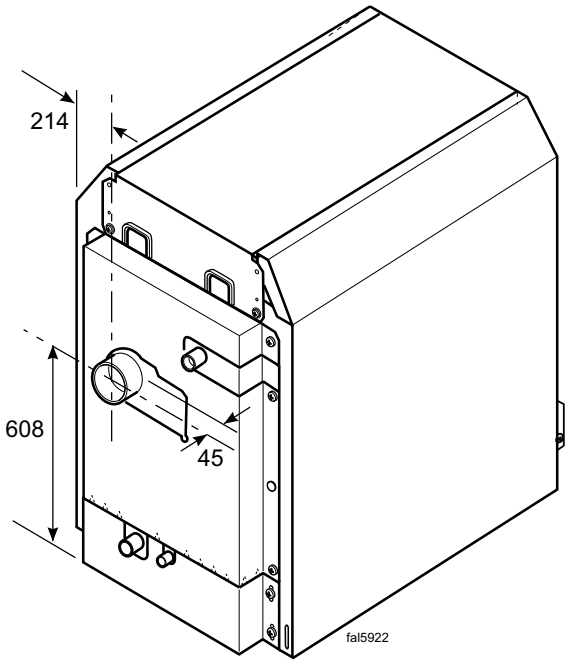

11 BURNER CONNECTION

Gas Supply

The gas supply MUST be sized in accordance with British Gas recommendations.

The Local Gas Authority should be contacted, at a stage prior to actual installation, for any advice or information required.

Oil Storage Tank

The oil storage tank, oil supply pipe and connections to the burner unit MUST comply with the requirements of BS. 799.

The installation should conform to the recognised standards of good practice in the trade and comply with the relevant Codes of Practice, building Regulations and Local Authority, Fire and Insurance requirements.

IMPORTANT. The burner head deflector must go past the door insulation as shown opposite.

Connection, adjustment, start-up and maintenance. (Refer to the instructions delivered with the burner)

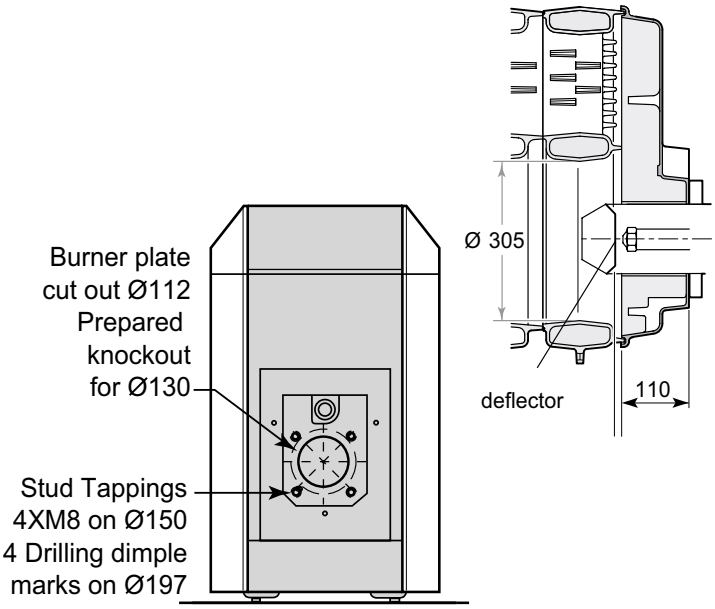

12 ASSEMBLY

Packaging:

The tables below show the numbers of the packages which make up the boiler. The packages are listed in the order in which they are opened for assembly.

Tools required:

- Phillips head screwdriver
- Wide flat screwdriver
- 13 and 17mm spanners
- hammer
- Silicone glue
- JDTE assembly tool
- Simplified assembly tool

Boiler	GTE 4	GTE 5	GTE 6	GTE 7	GTE 8	
Boiler body delivered loose - front section - intermediate section - rear section - set of assembly rods - accessory package	 1 2 1 - IL 4	 1 3 1 - IL 5	 1 4 1 1 IL 6	 1 5 1 1 IL 7	 1 6 1 1 IL 8	
Assembled boiler body - optional with accessories	IL 24	IL 25	IL 26	IL 27	IL 28	
Baffle Pack	IL 35 3 Baffles	IL 36 2 Baffles	IL 37 2 Baffles	IL 37 2 Baffles	IL 36 2 Baffles	
Control Panel - Standard On/Off - Optional High/Low	 IC7 -	 IC7 -	 IC7 -	 IC7 DR31	 IC7 DR31	
Casing	IL 14	IL 15	IL 16	IL 17	IL 18	

The assembly of any optional devices purchased with the boiler is described in the instructions supplied with the relevant device or in the control panel instructions. The list of available optional devices is provided in the applicable price list.

13 PREPARING THE FRONT AND REAR SECTIONS

Installing the height convertor and the adjustable feet on the rear section.

1. Fix the adjustable feed (supplied in the bag containing the casing fasteners) onto the height converters.

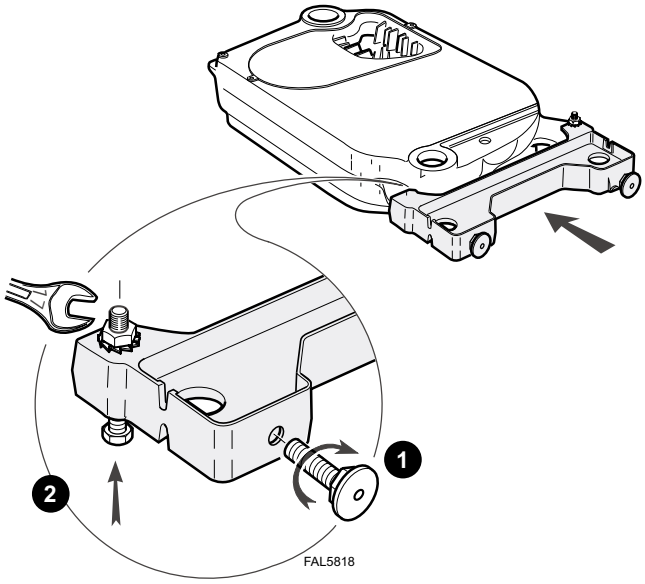

2. Place the rear section on the floor and fix the height converter with two M10 x 25 bolts, serrated washers and nuts using a 17mm spanner.

3. Place the front section on the floor (with the groove facing up) and fix the height converter with two M10 x 25 bolts, serated washers and nuts using a 17mm spanner.

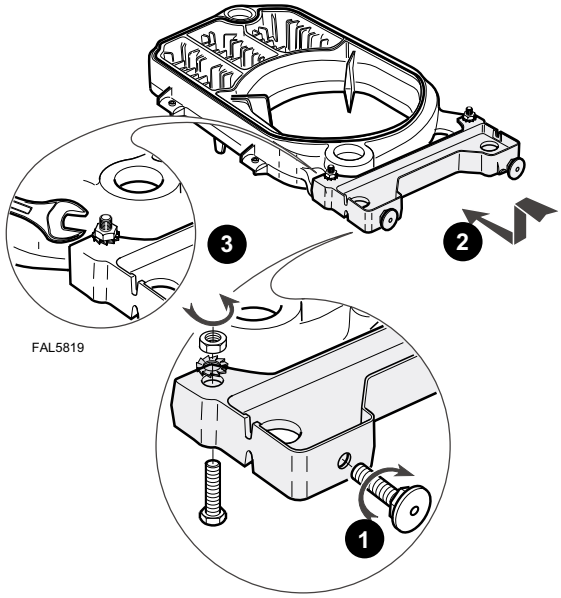

14 PREPARING THE SECTIONS

1. Support the rear section with a wooden block.
2. Place a block with a height of approx. 150mm (the length varies from 320 - 820mm depending upon the number of sections) to support intermediate sections.
3. Clean the bores and nipples with kerosene/paraffin.
4. Coast them with the coating material supplied.
5. Push in the two nipples moderately.
6. Place the intermediate and front sections on the floor, groove upwards.
7. Prepare the silicone cartridge.
8. Put a drop of silicone at about every 200mm of the groove of the intermediate and front sections.

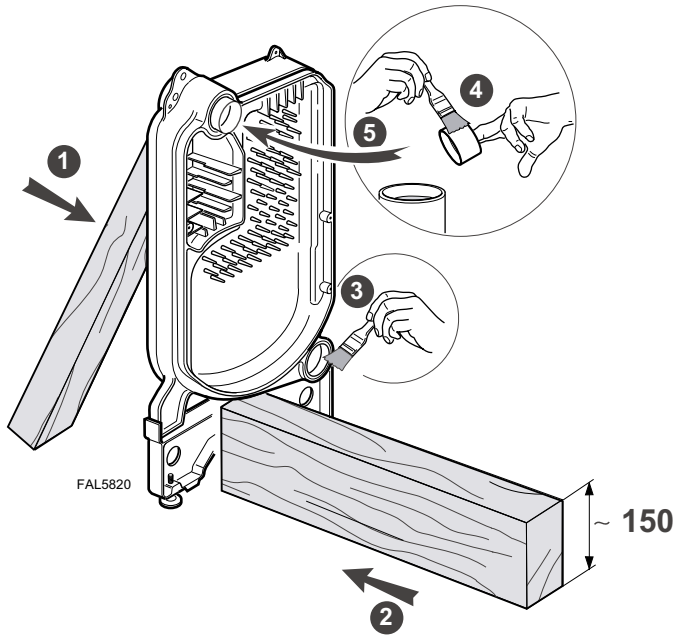

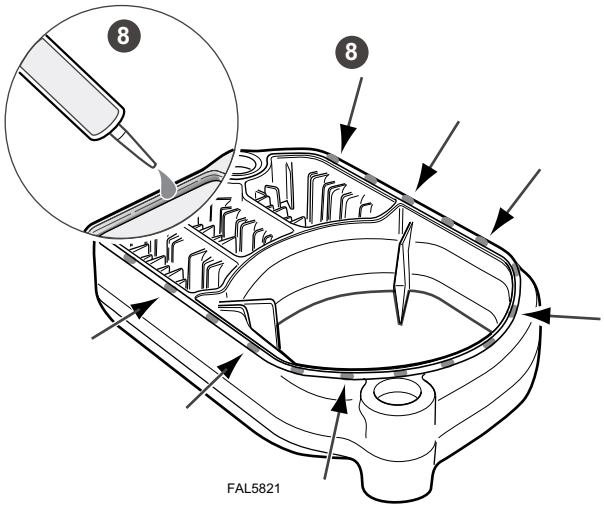

15 FITTING THE SILICON BRAID

1. Working from point A, insert the silicone braid into the groove of the intermediate and front sections.
2. Cut it to the correct length.

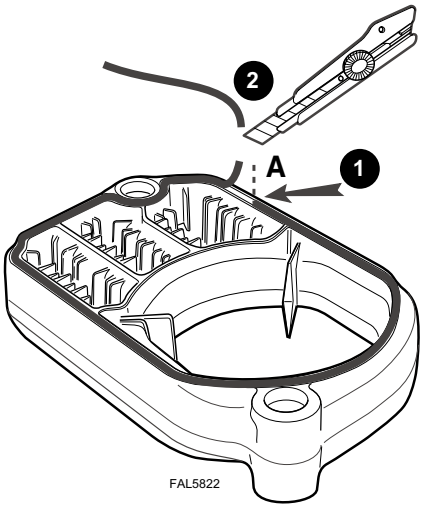

16 ASSEMBLING THE INTERMEDIATE SECTIONS

1. Place the first intermediate section on the wooden block.
2. Fit the connections of the intermediate section onto the nipples in the rear section.
3. Hammer in with the help of a small wooden block.
4. Proceed likewise for the other intermediate sections.

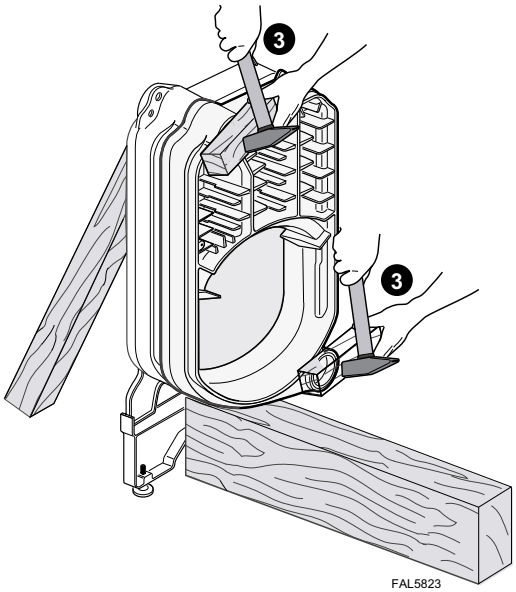

17 ASSEMBLING THE FRONT SECTION AND PULLING UP COMPLETE ASSEMBLY

1. Complete the assembly with the front section.
2. Insert the assembly tool through the nipples and tighten.
3. Remove the wooden block
4. Slide the two threaded rods in place without removing the assembly tool and secure with the four M8 flanged nuts supplied.
5. Clean off any surplus silicone.
6. Remove the assembly tool.
7. Level the boiler by adjusting its feet.

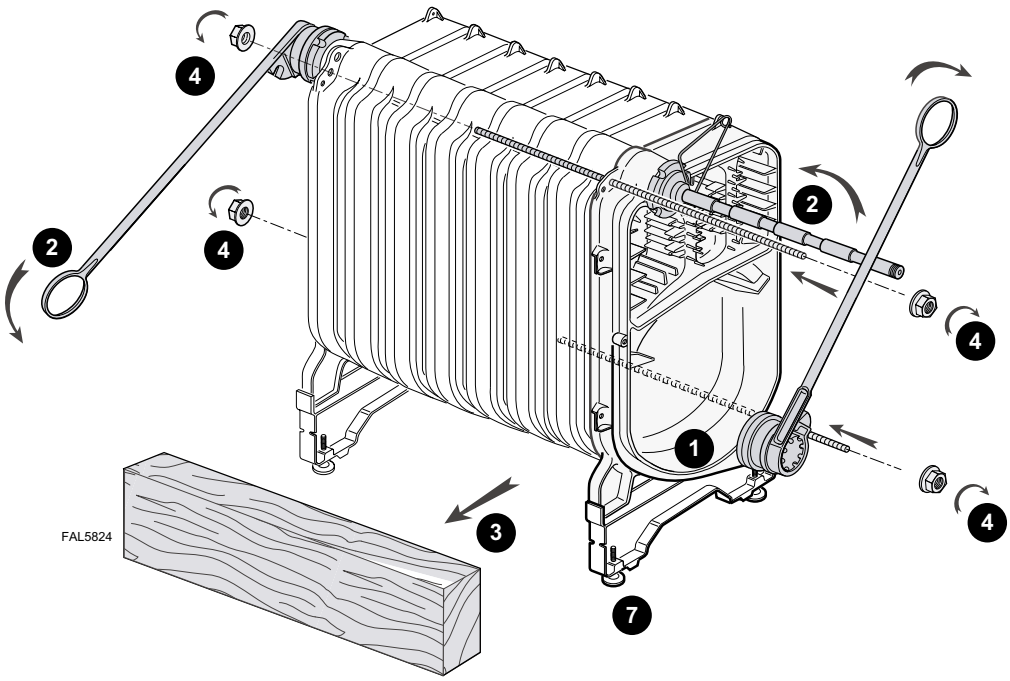

18 ASSEMBLING THE FLOW, RETURN AND DRAINING PIPES

1. Coat the threaded and tapped connections of the sections, pipes, plugs and sensor tubes with thread sealing compound (not supplied).
2. Screw the 2 flow and return pipes and the draining pipe into the rear section.
3. Screw the threaded bush with the sensor pocket into the upper connection and the plug into the lower connection.
4. On the front, install the two M10 studs into the holes designed for that purpose.

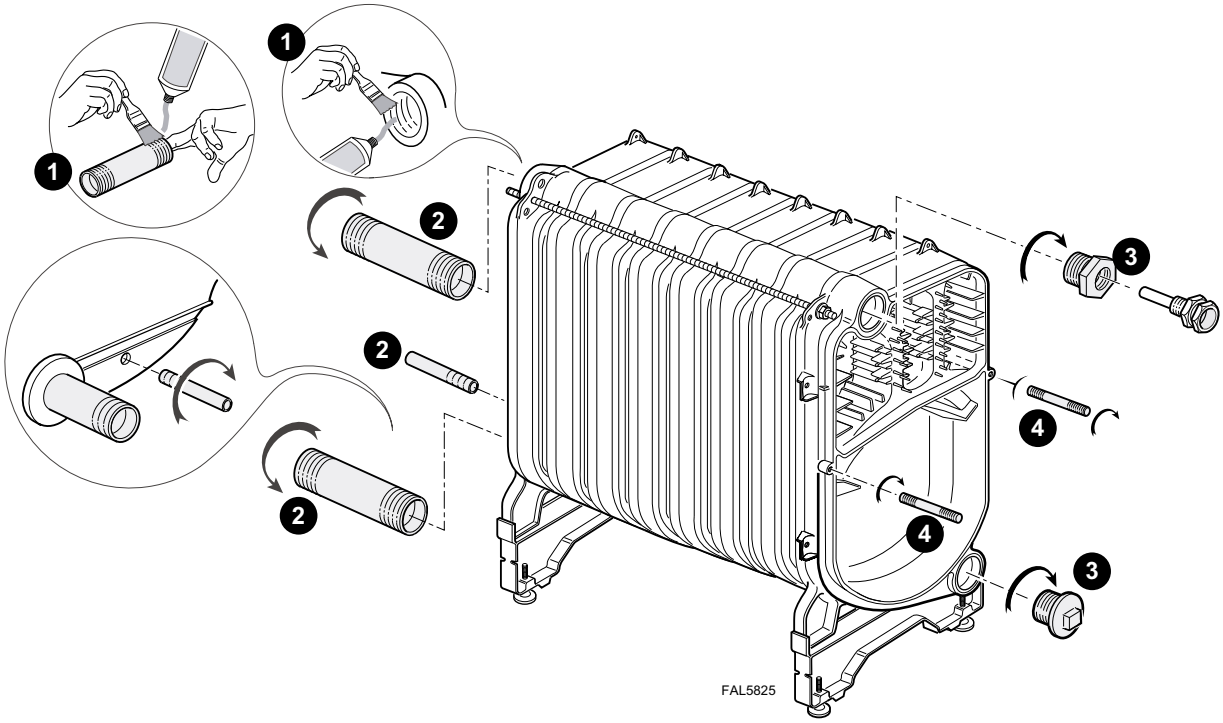

19 ASSEMBLING THE DOOR WITH RIGHT HAND OPENING

1. Put the lower hinge in place, press it against the front section and secure it with an M10 x 50 bolt and wide CL 10-20 tapered washer (17mm spanner).
2. Screw in loosely the other M10 x 50 hinge bolt and wide CL 10-20 tapered washer.
3. Mount the upper hinge onto the M10 x 50 screw and secure.
4. Screw in loosely M10 x 20 adjusting screw on the upper hinge.

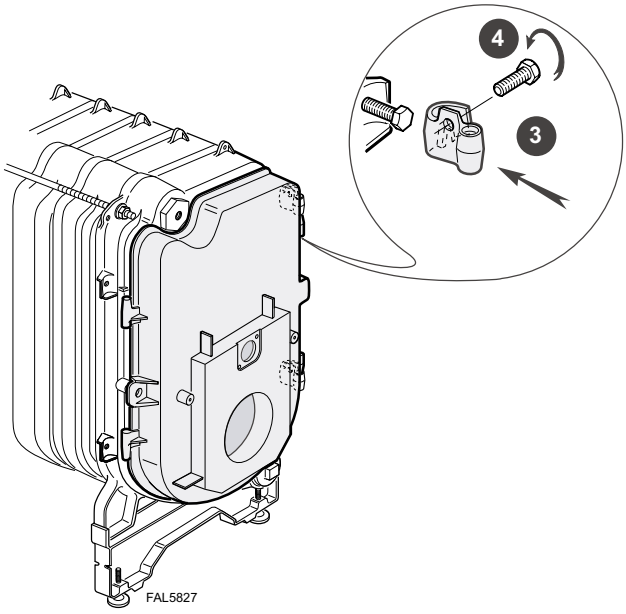

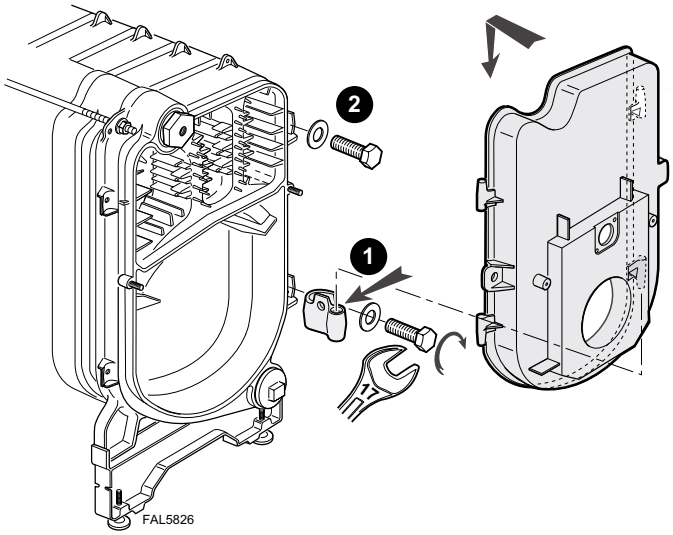

20 DOOR ALIGNMENT

1. Adjust the upper hinge to align the door by
   a. Loosen screw **A**
   b. Adjust screw **B** so that the door is positioned correctly.
   c. Tighten screw **A**.
2. Secure the door with the two special bolts

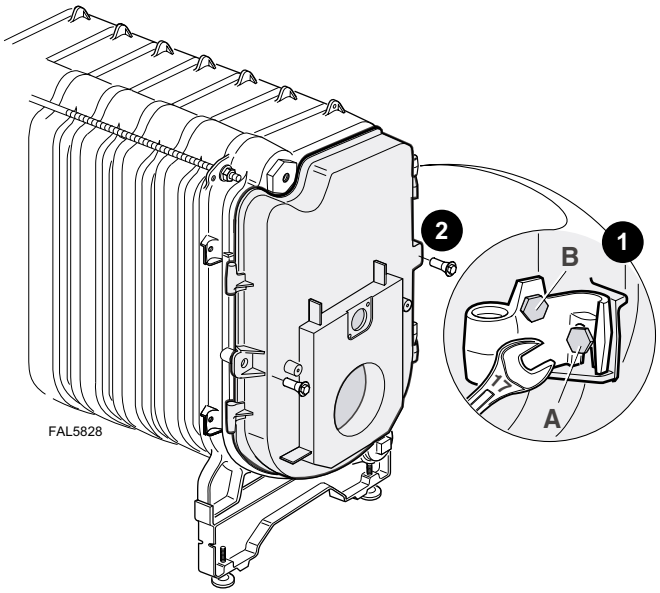

21 ASSEMBLING THE DOOR WITH LEFT-HAND OPENING

Assembling the door with left-hand opening

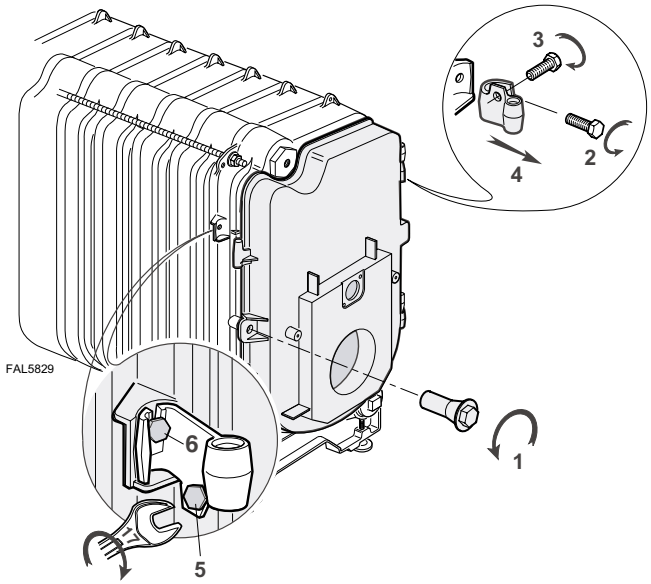

Proceed similarly, with the hinges on the left-hand side, as described in Frames 19 and 20.

22 POSITIONING THE FLUE BAFFLES

1. Open the door.
2. 4 section models; place the 3 flue baffles in the flues. Push them home.
3. 5-8 section models: place the 2 flue baffles in the centre and right hand flues.
4. Close and secure the door with the special bolts (17mm spanner).

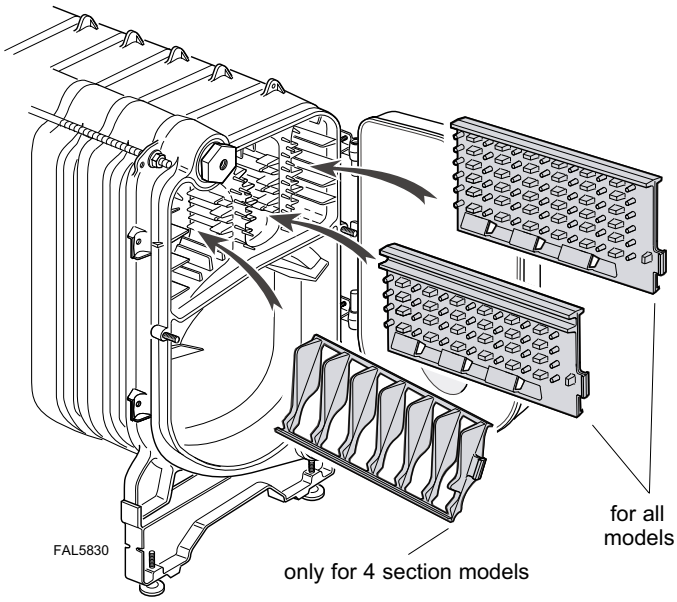

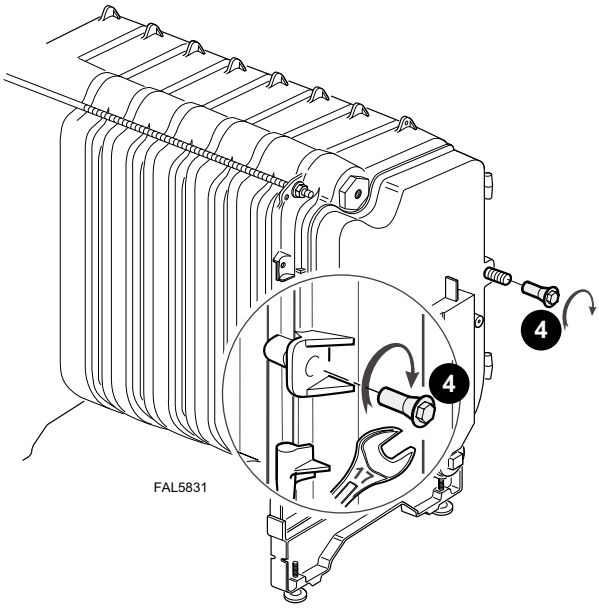

23 FITTING THE SMOKEHOOD

1. Screw the two M8 studs into the rear section.
2. Assemble the flue gas collector hood onto the studs and secure with two flanged nuts.

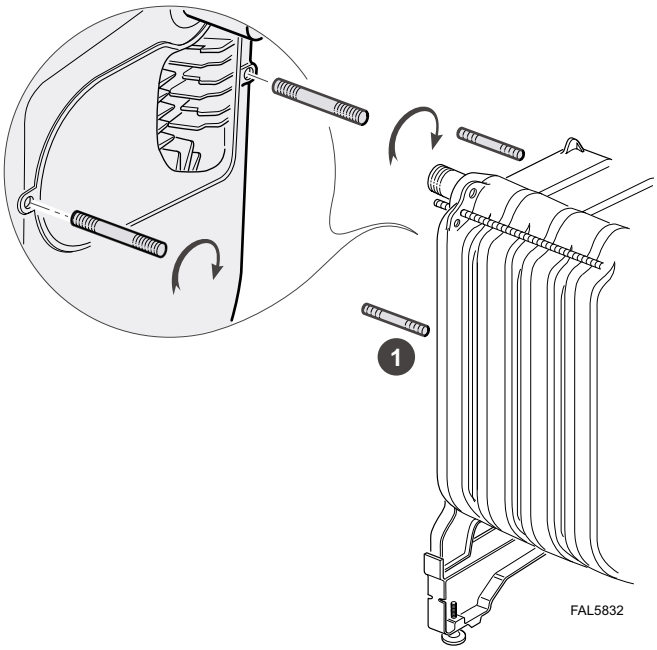

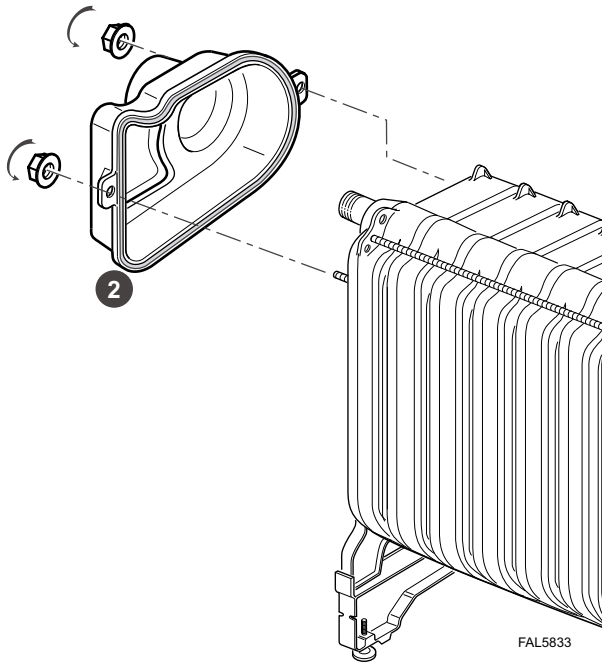

24 INSTALLING THE CONTROL PANEL

1. Place the control panel on the boiler body.
2. Position it on the body assembly tie rod.
3. Push it home behind the lugs.
4. Secure it to the front section with two M8 bolts and serrated washers by screwing into the cast iron lugs.

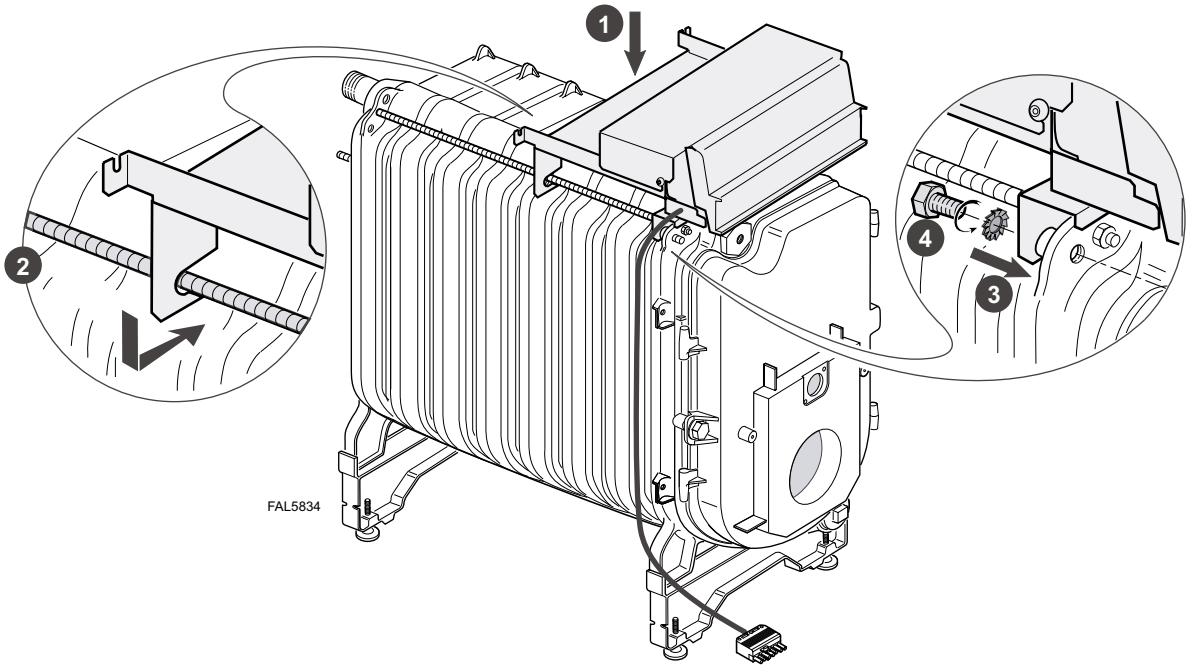

25 INSTALLING THE SENSORS (AND REAR CROSSBAR)

1. Put the sensors in place in the sensor pocket.
2. Slide the spirap along the leads.
3. Loop the leads over and secure with the spring clip.
4. pass the wires under the control panel.
5. Open the casing package and take out the rear crossbar.
6. Secure the crossbar to the rear section on the outside of the lugs with two M8 screws and 2 serrated washers.

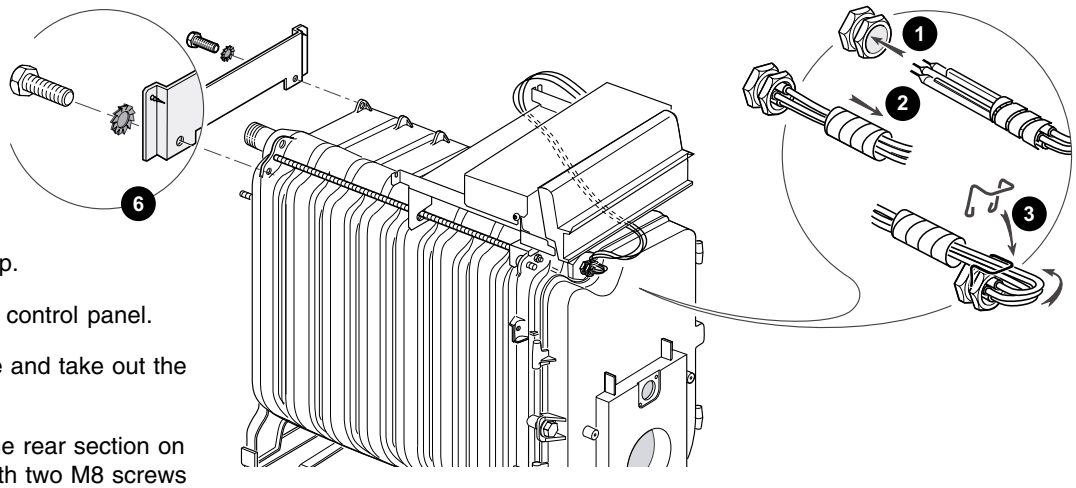

26 INSTALLING THE INSULATING MATERIAL

1. Place the insulating material under one side of the boiler with the black fabric facing downwards.
2. Lift the insulating material around the body and fix it with two straps.
3. Put one strap on the front, underneath the control panel and the other at the middle of the remaining part.

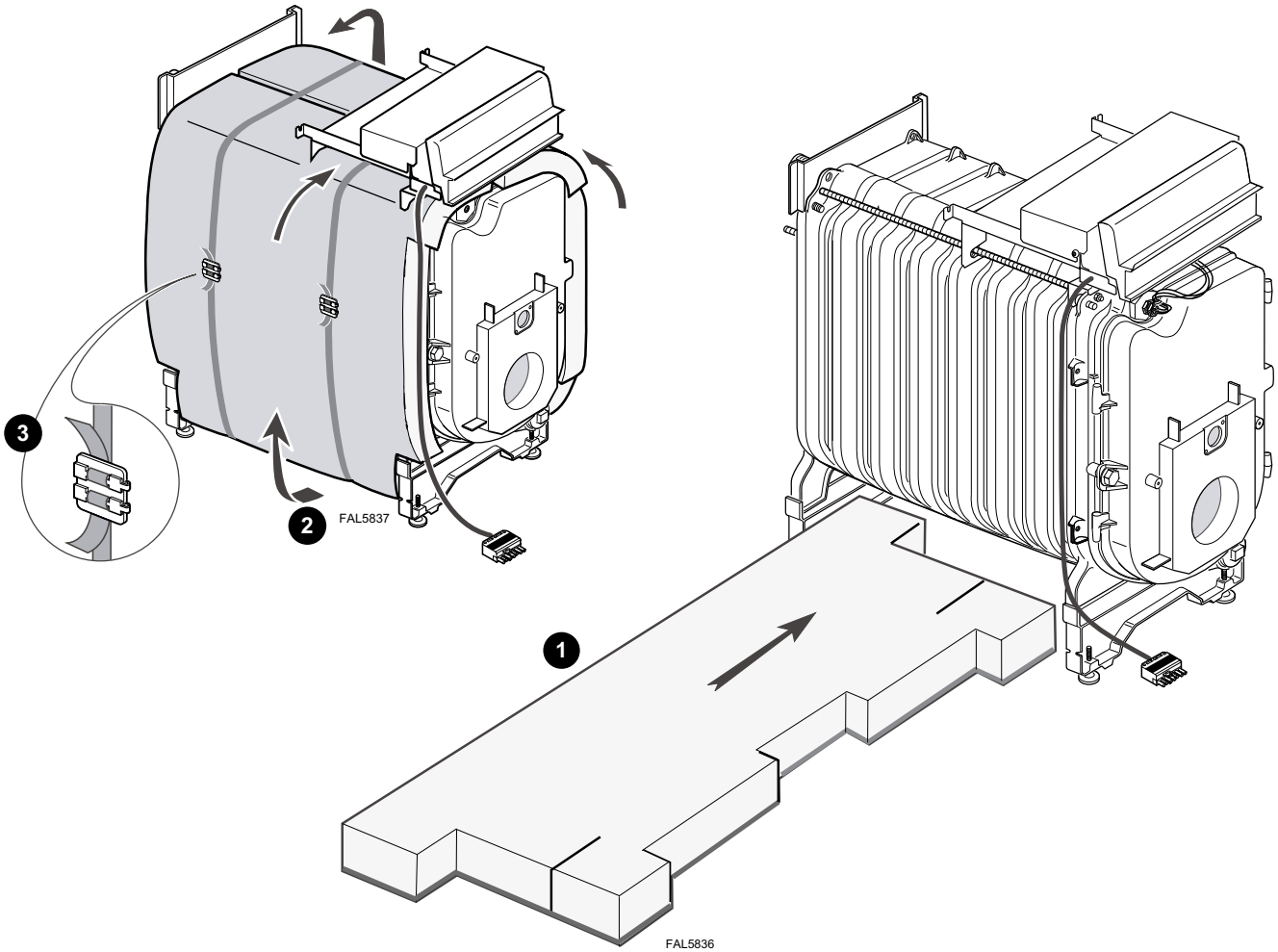

27 FITTING THE SIDE PANEL SUPPORTS

1. Place the two lower side pieces (with the round hole towards the front and the oblong hole towards the back of the boiler).
2. Fix:
   a. to the front with a screw, serrated washer and nut.
   b. To the rear with a screw, LL washer and nut.
3. Screw the screws home into the notch of the front height converters.

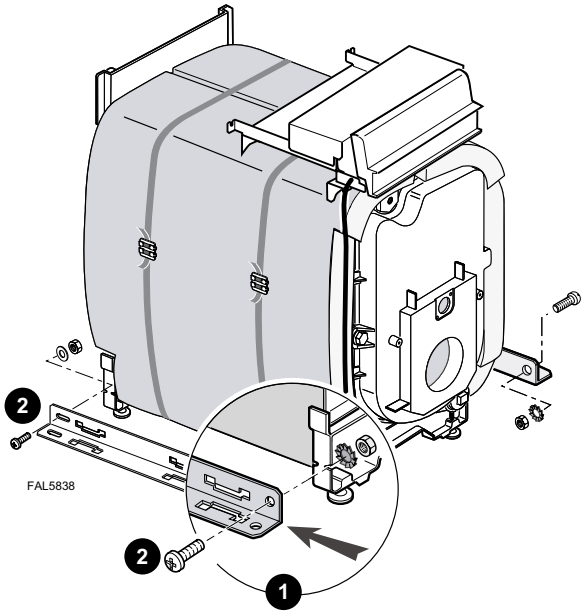

28 RE-ROUTING THE BURNER CABLE

If the burner cable is not routed on the side opposite to the hinges of the boiler door (as required under European standards) proceed as follows:

1. Open the control panel (two screws and serrated washers on the rear).
2. Relocate the burner cable on the opposite side and route it on the outside of the crossbar.
3. Relocate the grommet and pass the cable through it.
4. Refit the control top panel.

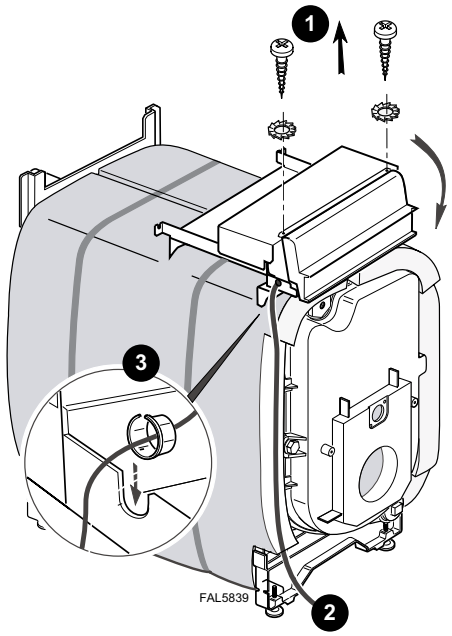

29 ASSEMBLING THE SIDE PANELS

1. Insert the side panels from the bottom into the notches on the lower side pieces.
2. Put the side panels in contact with the upper rear crossbar.
3. Fit 2 screws loosely and lift the panels up slightly and fit them in.
4. Fix them to the front of the control panel with two self tapping screws and serrated washers.
5. Tighten the screws of the rear crossbar.

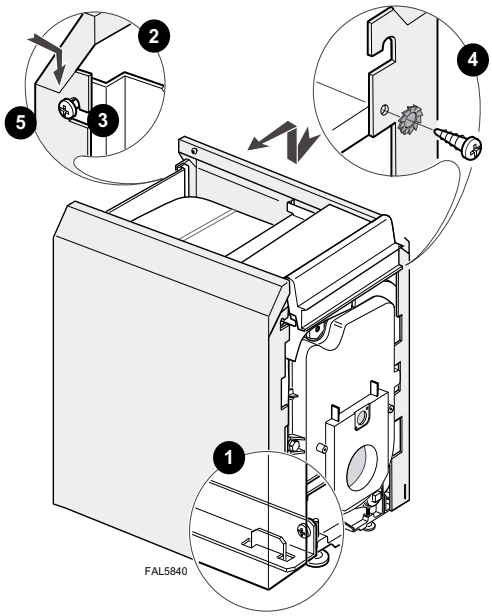

30 SECURING THE BURNER CABLE

1. Assemble the cable clamp on the side panel.
2. Place the burner cable behind the side panel on the burner side, holding it in place with the cable clamp and two 3.5 ∅ x 25 screws.
3. Adjust the length of the burner cable so that the burner has to be disconnected in order to open the furnace door. Store any surplus cable length between the rear part of the insulation and the side panel.

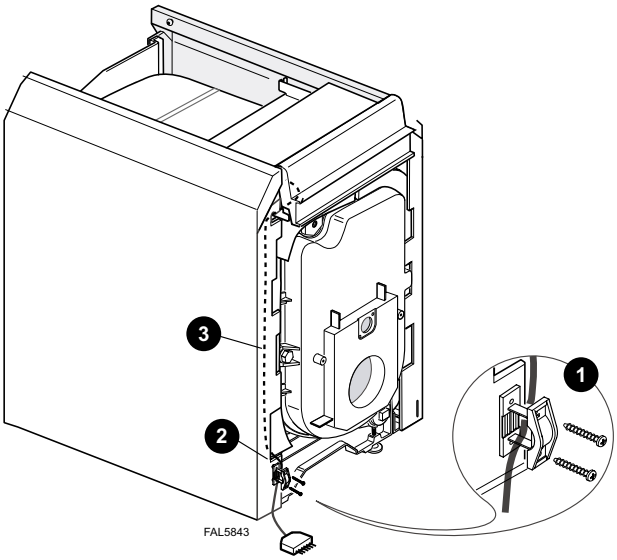

31 ASSEMBLING THE LOWER FRONT PANEL

To mount the lower front panel, proceed as follows:

1. Screw the two self tapping screws and serrated washers into the left and right-hand side panels.
2. Slide lower front panel, using the keyhole slots, onto the two self tapping screws and serrated washers.
3. Screw two self tapping screws and serrated washers into the lower part and tighten the four screws.

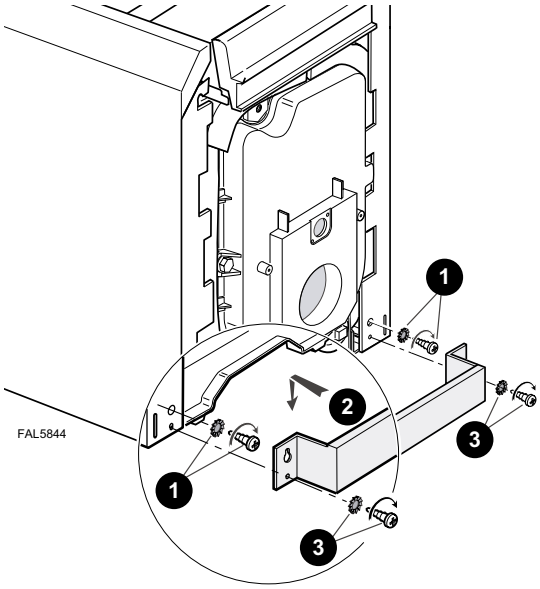

32 INSTALLING THE LOWER FRONT INSULATING MATERIAL

1. Install the insulation of the lower front panel with the black fabric facing upwards.

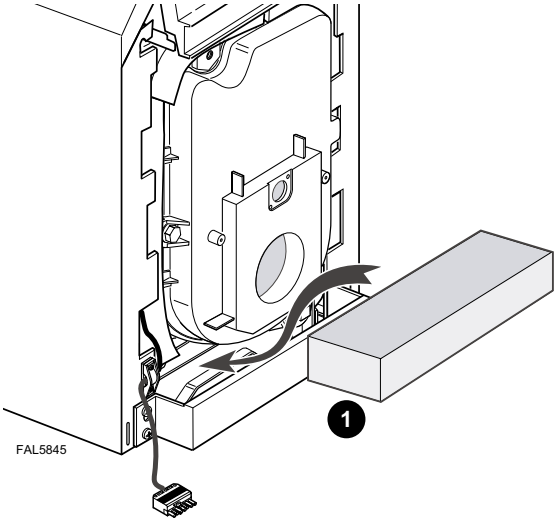

33 ASSEMBLING THE REAR PANEL

1. Mount the lower and upper rear insulating material, with the top folded in towards the boiler at a 90º angle.
2. Secure the rear plate (8 self tapping screws and serrated washers).

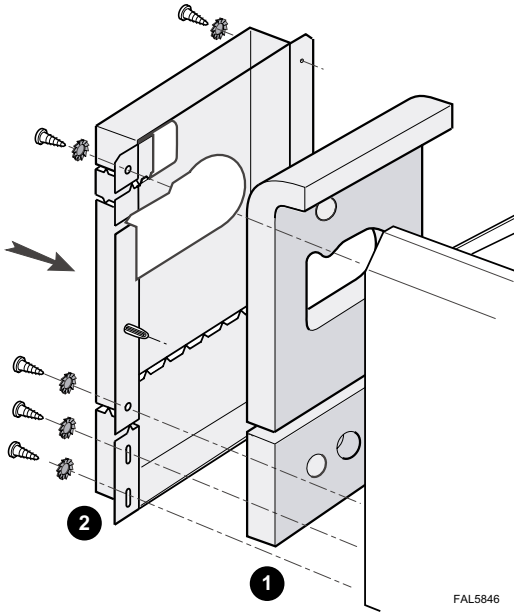

34 ASSEMBLING THE REAR PANEL (If pipework already made)

1. Cut the rear panel with shears along the cut-outs.
2. First assemble the lower part with four self tapping screws and serrated washers.
3. Then clip on the upper part.
4. If required, adjust the lower part upwards to conceal the cut edges.
5. Fix the upper part with four self tapping screws and serrated washers.

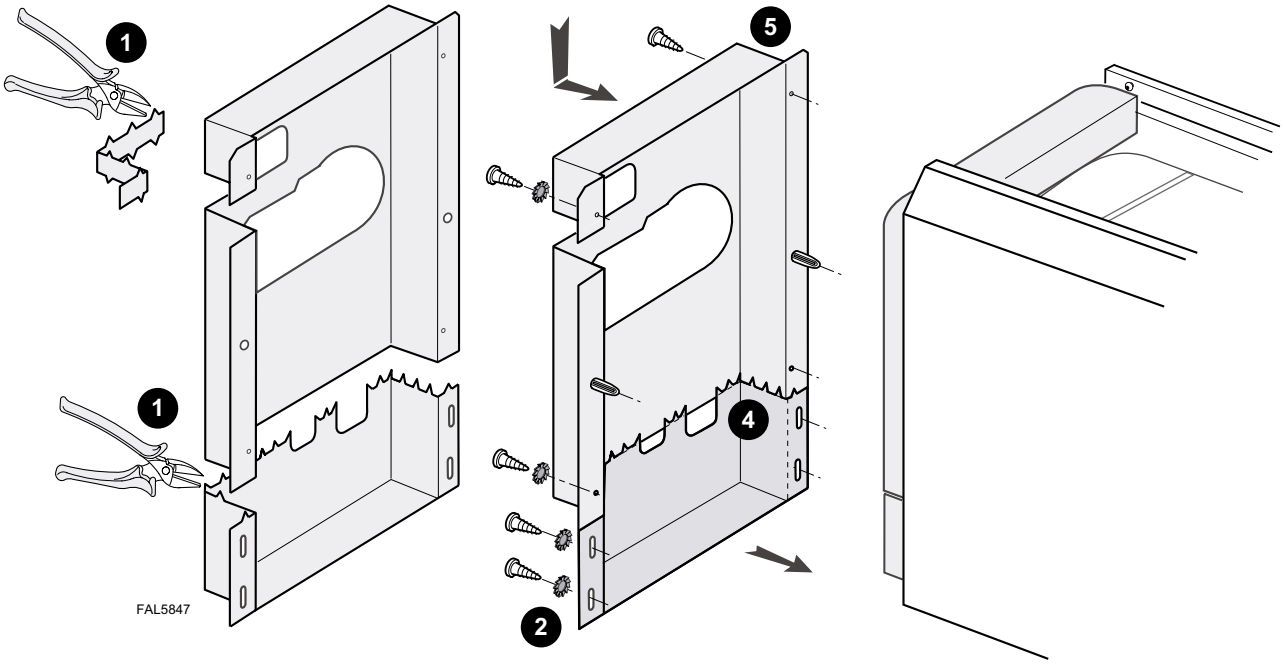

35 FITTING THE TOP PANEL

1. Assemble the cover by placing it on studs located on the front and rear of the left and righ-hand side panels.
2. Secure it with four self tapping screws and washers.

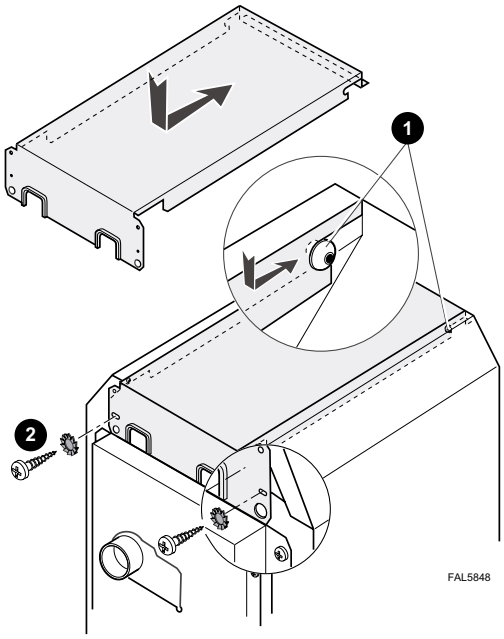

36 ASSEMBLING THE INSULATED FURNACE DOOR PANEL

1. Secure with the three black screws with large heads provided.

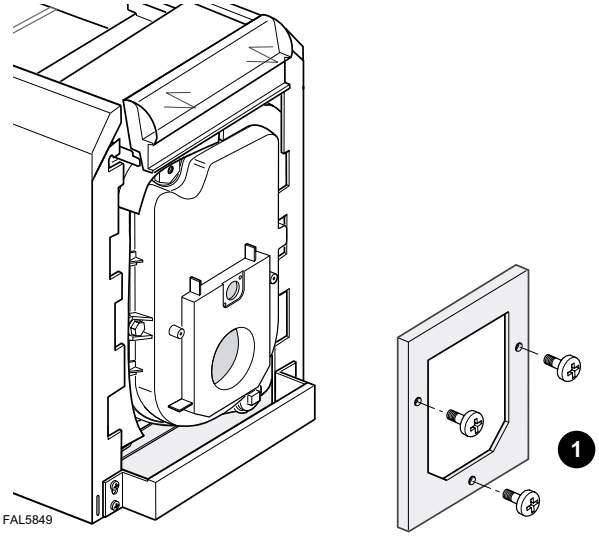

37 ASSEMBLING THE FRONT PANEL

1. Put notches **A** on studs **B** of the lower front panel.
2. Position point **C** in the centring groove of the side panel.
3. Push the panel in at the top to engage clips and make secure.

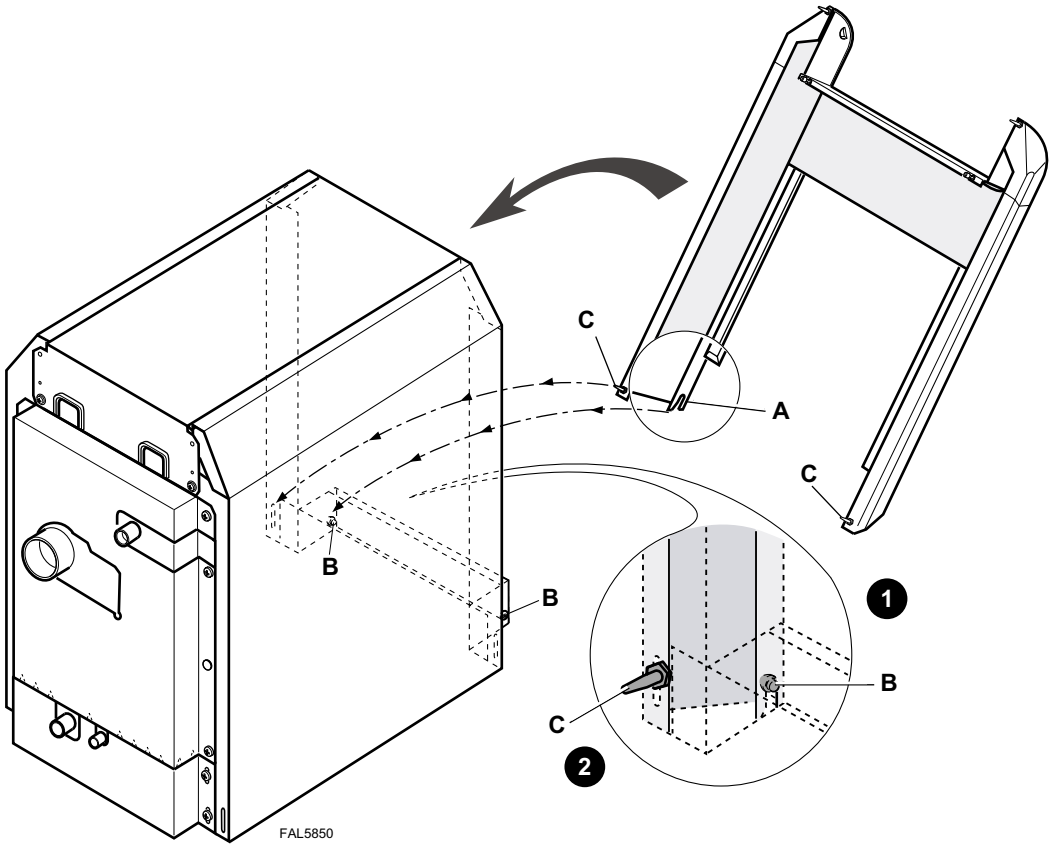

38 NAMEPLATE

Affix the identification plate and CE label (supplied in the instructions bag) on the casing (on the left or right-hand side) in an easily accessible location.

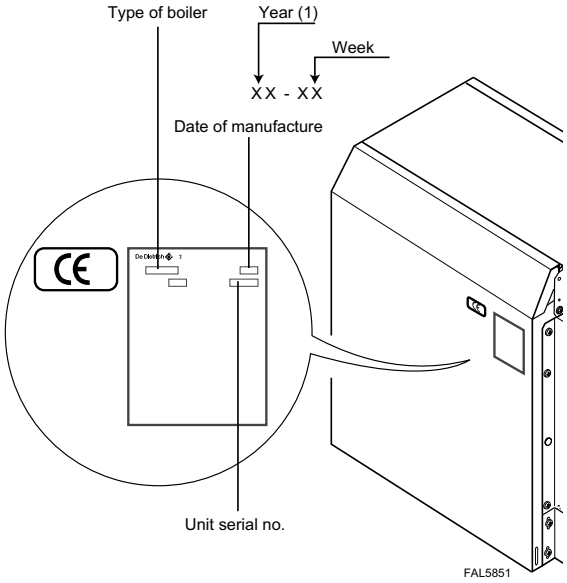

39 CONTROL PANEL

Electrical control panel, equipped with temperature control.

The control panel carton contains:

1 control panel complete with burner connection harness.

The control panel incorporates a boiler thermostat controller, a thermometer and a safety thermostat.

The boiler thermostat - controls the boiler operating temperature. (May incorporate high/low operation)

The safety thermostat (with manual reset) - if the boiler temperature rises abnormally (110ºC), the safety thermostat cuts off the burner electricity power supply.

WARNING. In this case, you must call your installer.

40 ELECTRICAL CONNECTIONS

WARNING. The electrical connections must be made by a qualified professional. The electrical wiring has been carefully checked in the factory and the internal connections of the control panel must not be modified in any event.

The electrical connections should be made following the information shown on the electrical diagrams delivered with the unit and the directions given in the instructions.

The electrical connection must comply with standards in force. The equipment must be powered by a circuit containing a remote double-pole switch with opening ≥ 3mm.

WARNING. The boiler must be earthed.

All connections must be made using the terminal blocks provided for this purpose at the back of the boiler control panel.

Connections cables are brought inside the boiler through cut-outs provided in the boiler back panel, which are large enough for the use of commercially available conduit if required.

These cables are secured at the back of the control panel using cable clamps (cable clamps supplied in a separate pack) that are to be installed on the sheet metal.

41 BASIC CONNECTIONS (On/Off Burner Control - All Models)

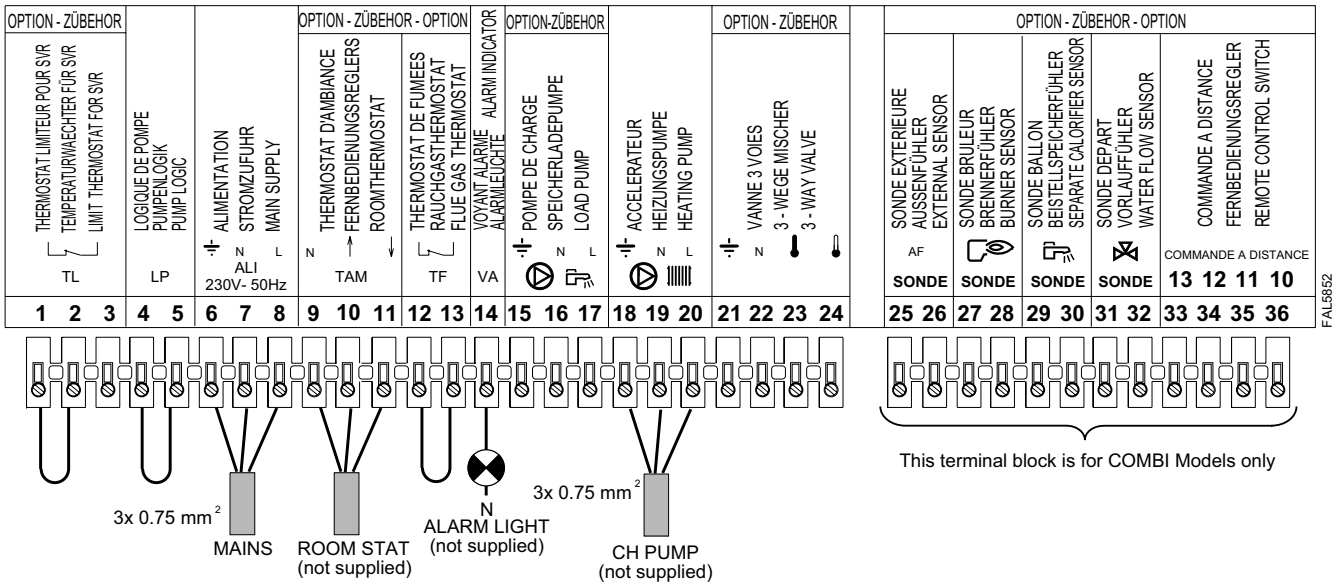

For standard operation connect mains supply and heating pump as shown in the above diagram.

42 WIRING DIAGRAM - (On/Off Control - IC7 Control Panel - All Models)

WARNING.

If the installation does not include a room thermostat (TAM), set three position switch 4 to ✋ (see Frame 48) .

If the installation includes a room thermostat (TAM), set three position switch 4 to **AUTO** (see Frame 48) **.**

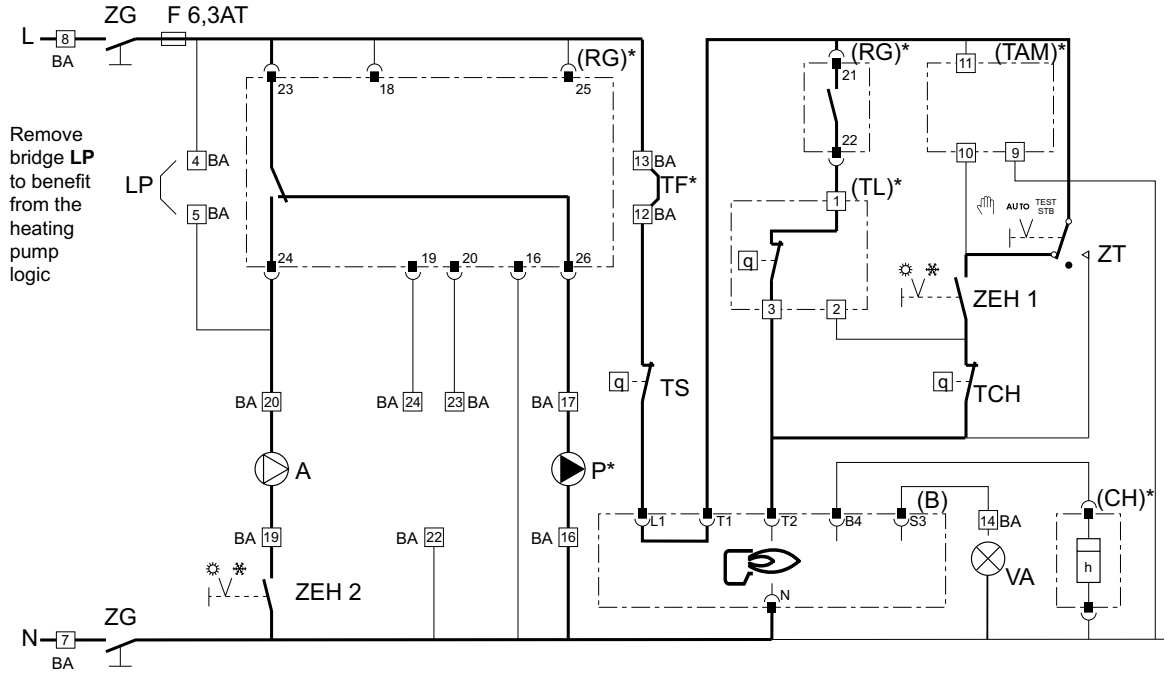

A	Heating pump	**RG**	Control unit	**ZEH2**	Heating pump Summer/ Winter switch
B	Burner	**TAM**	Room thermostat		
BA	Connection strip	**TCH**	Boiler thermostat	**ZG**	Main switch
CH	Time counter	**TF**	Flue gas thermostat	**ZT**	Test switch
CS	Safety contact	**TL**	Limiting thermostat	*	Optional
F6, 3AT	Fuse	**TS**	Safety thermostat		Connecting strip
L	Phase	**VA**	Alarm indicator		Connector
LP	Pump logic	**V3V**	Three-way valve		
N	Neutral	**ZEH1**	Burner Summer/ Winter switch		
P	DHW Pump				

fal5923

43 BASIC CONNECTIONS (High/Low Control - Models GTE 7 & GTE 8 Only)

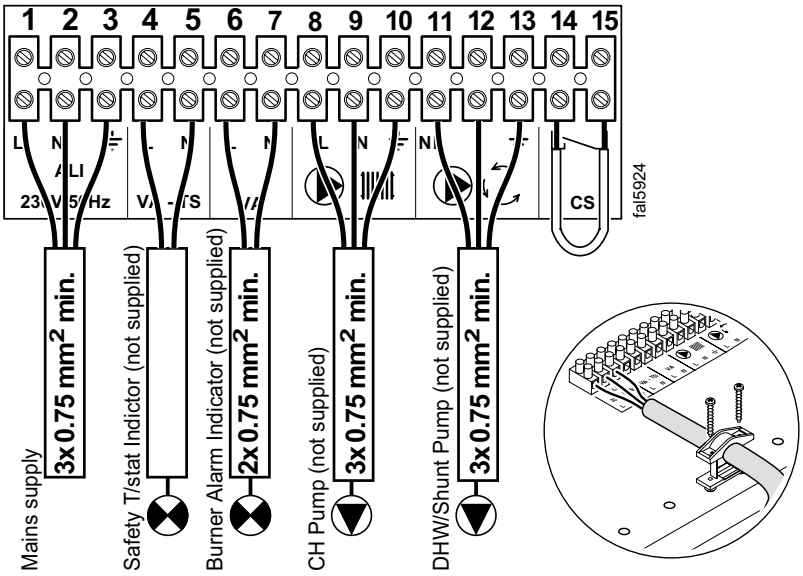

44 WIRING DIAGRAM (High/Low Control - DR31 Control Panel - Models GTE 7 and GTE 8 only)

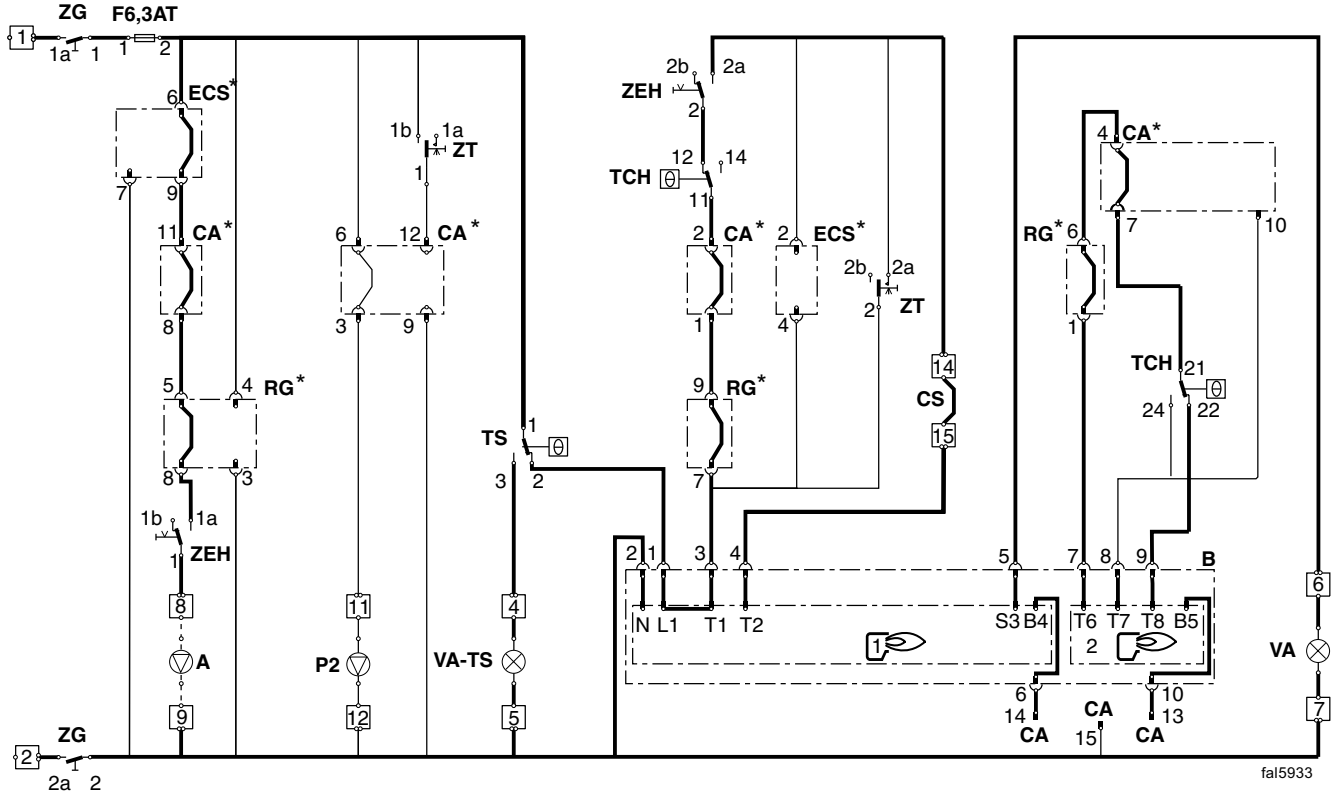

A	Heating pump	**TS**	Safety thermostat
B	Burner	**VA**	Alarm indicator
CA	Cascade connection block	**VA-TS**	Safety thermostat alarm indicator
CS	Safety contact	**ZEH**	Summer/Winter switch
ECS	Domestic hot water control	**ZG**	Main switch
F6,3AT	Delayed 6.3 A fuse	**ZT**	Manual/Auto/Test Switch
L	Live	⏚	Earth
N	Neutral	—▭—	Connecting strip
P2	DHW/shunt pump	*	Optional
RG	Connection block	—•)—	Connector
TCH	Boiler thermostat		

WARNING. The manual/Auto/Test Switch may be put in either the Manual or Auto position for normal operation

45 WIRING HARNESS (On-Off Burner Control)

The burner control circuit is fitted with a cable with a 7-pin European connecting plug which can be fitted directly to burners fitted with connector sockets.

In the case of a burner not fitted with sockets, remove the plugs on the burner cable from the boiler and connect the leads to the terminal bar on the burner, proceeding as follows:

Refer to No (9) [1], No (8) [N], No (7) T1, No (6) T2, No (10)S3 and g/y. i.e plug for single stage burner. (See Frame 46.)

46 WIRING HARNESS (High/Low Burner Control)

The burner control circuit is fitted with a cable with two standard European connecting plugs which can be fitted directly to burners fitted with connector sockets. In the case of a burner not fitted with sockets, remove the plugs on the burner cable from the boiler and connect the leads to the terminal bar on the burner, proceeding as follows:

No (9) [1] Control circuit phase interrupted in panel by safety Thermostat TS, Limit Thermostat TS and panel ON/OFF switch ZG. Connect to control circuit live terminal burner.

NOTE: The connection terminal for this control phase must be separate from those of the power supply phase(s) which are wired direct to the burner via the installer supplied burner mains relay.

No (8) [N] Neutral from control panel interrupted by panel ON/OFF switch. Connect to Neutral terminal of burner control box.

No (7) T1 Live feed from burner control circuit downstream of burner ON/OFF switch. Connect to live side of first stage control thermostat (High temperature setting).

No (6) T2 Return from 1st stage control thermostat (High temperature setting). Live on this lead, hence on T2 allows burner to fire on low fire in a 2 stage burner.

No (10)S3 Burner lock indicator. Feeds signal from lockout terminal on burner control box to lock out indicator on boiler control panel.

No (4) B4 Feed to 1st stage operating indicator from burner low fire control. Indicates low fire in operation. Essentially feed back from live on No (6) T2.

No (2) T6 Live feed from burner control circuit downstream of burner ON/OFF switch. Connects to live side of 2nd stage control thermostat (Low setting thermostat).

No (3) T8 Return from 2nd stage control thermostat (low temperature setting). Live on this lead, hence on T8 allows burner to fire on high fire in a 2 stage burner.

No (5) T7 Back contact from 2nd stage control thermostat (low temperature setting). Live on this lead, hence T7 indicates high fire out of operation (used for modulating burners only).

No (1) B5 Feed to 2nd stage operating indicator from burner high fire control to boiler panel. Indicates high fire in operation. Essentially feed back from live on No (3) T8.

g/y Earth.

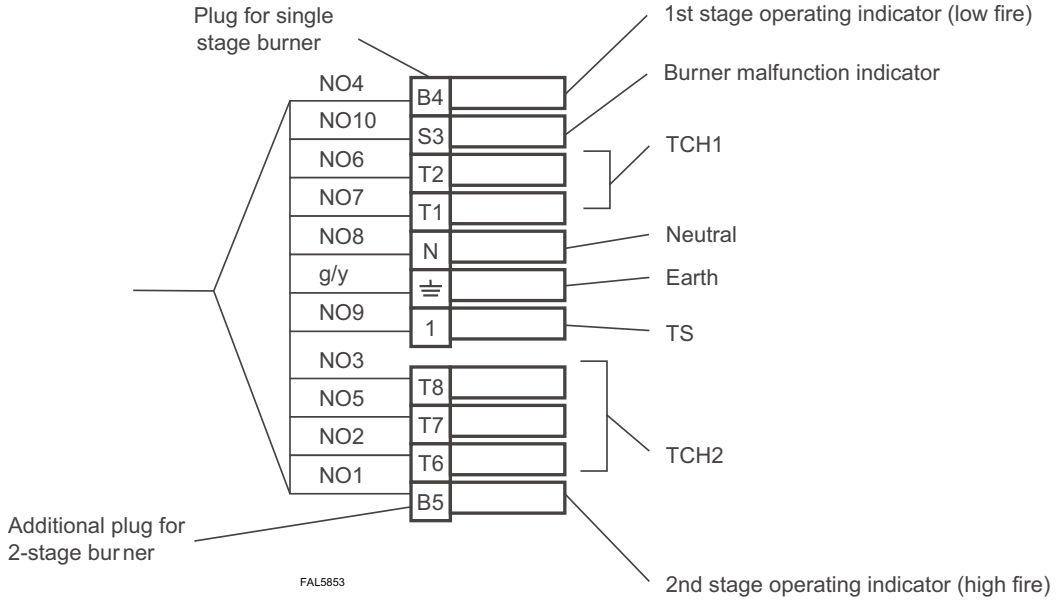

47 FUEL OIL OR GAS CONNECTIONS

Refer to the instructions supplied with the burner.

48 COMMISSIONING

IMPORTANT. Domestic hot water circuits (if they exist and heating circuits must have been filled and bled, and leak tightness tests must have been carried out on them, in accordance with the instructions for the domestic hot water calorifier (if existing) and boiler.

Refer to the following instructions to start up the boiler.

- the instructions delivered with the burner.
- the instructions delivered with the domestic hot water calorifier, (if existing).

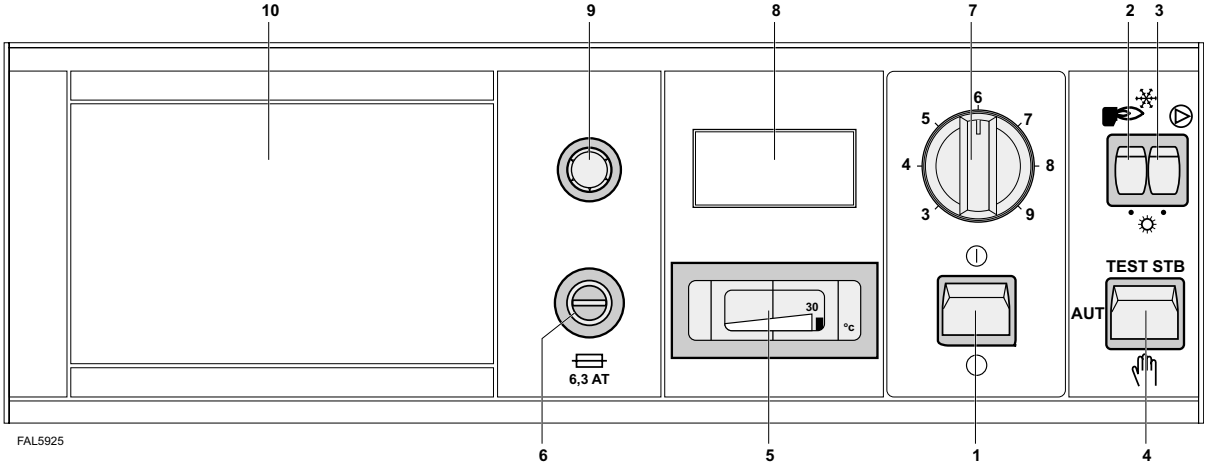

1. **Boiler on/off switch.**
   Position ⏀.....ON Position ○.....OFF

2. **Burner Summer/Winter switch:**
   Winter ❄ starts the burner.
   Summer ☼ stops the burner.

3. **Heating Pump Summer/Winter Switch:**
   Winter ❄ starts the heating pump.
   Summer ☼ stops the heating pump.

4. **Three-position switch:**
   TEST STB: when held in the pressed (momentary use) position it tests the safety thermostat.
   Note. If two stage burner control fitted operation will continue on 1st stage after 2nd stage cut-off.
   The heating pump switch (3) may be put in the Summer position while performing this test.
   AUTO : automatic position, used for normal operation of the boiler. Use this position if a room thermostat is fitted.
   ✋**: Manual Position:** may be used for normal operation if two stage burner fitted, but overrides room thermostat (if fitted) when ON/OFF burner operation fitted.

5. **Boiler thermometer:** indicates boiler flow water temperature.

6. **Fuse:** 6.3 amp timed fuse.

7. **Boiler Thermostat:** Adjustment range 30-90ºC for ON/OFF burners and 30-90ºC 1st Stage, 26-86ºC 2nd stage for two stage burners. (Automatic changeover from high to low fire at 4º below the flow setting.)
   Factory set at 75ºC.
   Built in stops may be reset (See Frame 49).

8. **Hour Run Meter:** (optional if fitted).

9. **Safety Thermostat:** (with manual reset) set at 110ºC.

10. **Location for MB1 module:** used for DHW control on Combi models only.

49 BOILER THERMOSTAT (Maximum Setting Adjustment)

The boiler thermostat maximum setting is factory set at 75ºC. The fixed stop controlling the maximum setting is adjustable as follows:

1. Carefully remove the control knob.
2. Pull out the pin from the back of the knob.
3. Relocate in the desired position. Temperature settings are marked alongside the pin locations.
4. Carefully replace the knob ensuring that the new pin position is at the correct side of the stop.
5. Rotate the knob to the new desired maximum position to check correct setting. (The setting numbers 3-9 are approximately scaled to represent 30-90ºC).

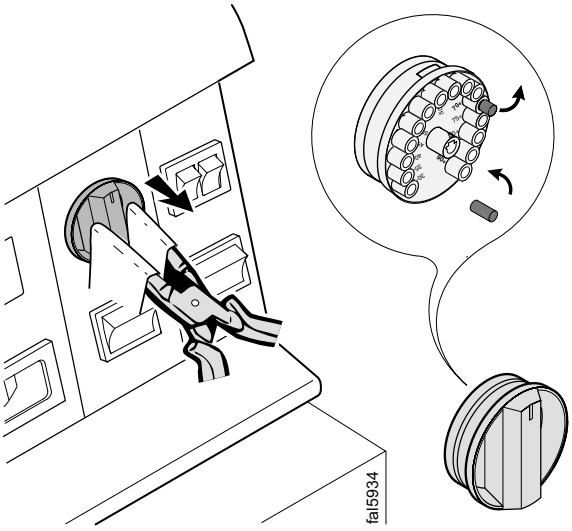

50 COMMISSIONING AND TESTING

A. ELECTRICAL INSTALLATION

1. Checks to ensure electrical safety should be carried out by a competent person.
2. ALWAYS carry out the preliminary electrical system checks, i.e. earth continuity, polarity, resistance to earth and short circuit, using a suitable meter.

B. FOR GAS INSTALLATION

1. The whole of the gas installation, including the meter, should be inspected and tested for soundness and then purged in accordance with the recommendations of the relevant standards listed on page 4.

WARNING. *Whilst effecting the required gas soundness test and purging air from the gas installation, open all windows and doors, extinguish naked lights and DO NOT SMOKE.*

51 INITIAL LIGHTING

1. Check that the system has been filled and the boiler is not air locked - air in the boiler could damage the heat exchanger. For this reason the air vent located in the left top side must never be shut off.
2. Check that all the drain cocks are closed and any valves in the flow and return are open.
3. Check that the GAS SERVICE COCK IS ON.
4. Unscrew the overheat reset button cap and press the reset button.
5. Set the boiler thermostat to maximum.
6. Set the 3 position switch to Manual or Auto as appropriate.
7. Set the burner and pump summer/winter switches to the winter setting.
8. Switch the electricity supply ON and check that all the external controls are calling for heat. Set main boiler switch to on.
9. The burner will commence the ignition sequence. If the burner has failed to light then it will lock out. Press the reset button to restart the ignition sequence.
10. Operate the boiler for 20 minutes and for gas fired boilers check the gas rate (Table 1).
11. Refer to the burner instructions for specific operating features.

52 GENERAL CHECKS

Make the following checks for correct operation.

1. The correct operation of ANY secondary system controls should be proved. Operate each control separately and check that the main burner or circulating pump, as the case may be responds.
2. Water circulation system;
   a. With the system HOT examine all water connections for soundness.
   b. With the system still HOT, turn off the gas or oil burner, water and electricity supplies to the boiler and drain down to complete the flushing process.
   c. Refill and vent the system, clear all air locks and again check for water soundness.
   d. Balance the system.
3. Finally set the controls to the User's requirements.

53 HANDING OVER

ROUTINE OPERATION

Describe the function of the boiler and system controls and show how they are adjusted and used.

Hand these Installation and Servicing Instructions, User's Instructions and Log book to the customer and request him to keep them in a safe place for ready reference.

IMPORTANT. Point out the owner that the boiler must have regular maintenance and cleaning, at least annually, in order to ensure reliable and efficient operation. Regular attention will also prolong the life of the boiler and should preferably be performed at the end of the heating season.

Recommend that a contract for this work should be made with the regional gas authority or a CORGI registered heating installer for gas fired boilers.

54 MAINTENANCE

WARNING

The operations described below shall always be performed with the boiler and the power supply switched off.

The boiler front panel has to be removed to access the various devices to be maintained and checked.

1. Pull the front panel forward at the top.
2. Lift off the engaging clips.

Cleaning the Casing Material

Use a soapy solution and sponge only. Rinse with clean water and dry with chamois leather or soft cloth.

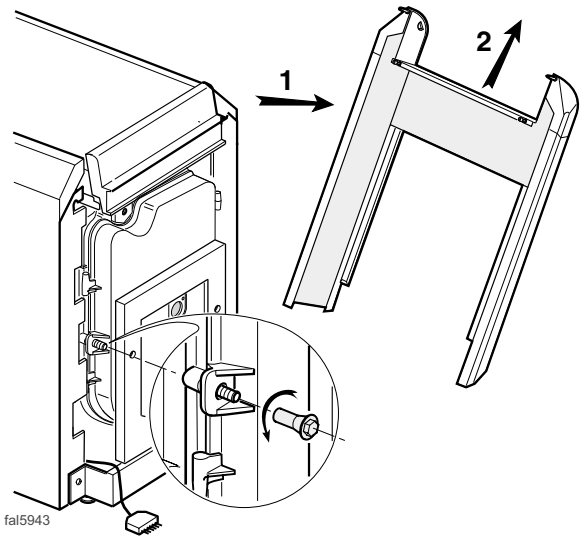

55 CLEANING THE FLUEWAY

1. Close off the fuel supply to the burner.
2. Ensure that the boiler has been cooled to ambient temperature.
3. Isolate the mains supply to the boiler and burner.
4. Disconnect the cable and supply pipe to the burner.
5. Open the combustion chamber door by removing the 2 special bolts.
6. Remove the flue way baffles.
7. Thoroughly clean the flue ways and baffles.
8. Remove the rear cleanout covers and dispose of the debris/soot that may have accumulated.
9. Replace the rear cleanout covers after first inspecting and if necessary replacing the seal.
10. Brush out the combustion chamber and vacuum the soot from beneath the flue ways.
11. Replace the flue baffles into the flue ways:
    4 section models - fit 3 flue baffles, one each flue
    5-8 section models - fit 2 flue baffles only in the centre and right hand flues.
12. Check the condition of the combustion chamber door insulation.
13. Check the condition of the combustion chamber door seal.
14. Close the combustion chamber door and replace the front panel.
15. Re-assemble the burner connections.

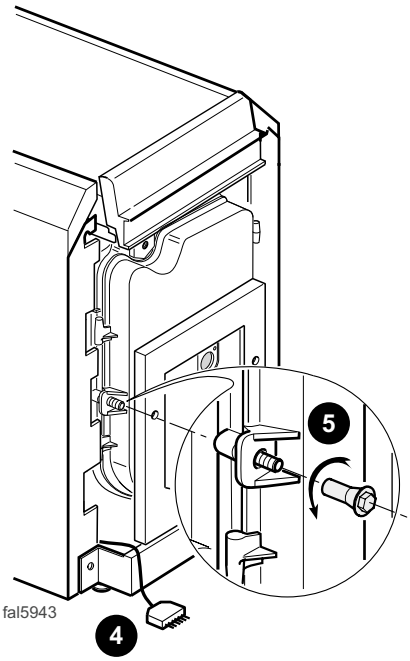

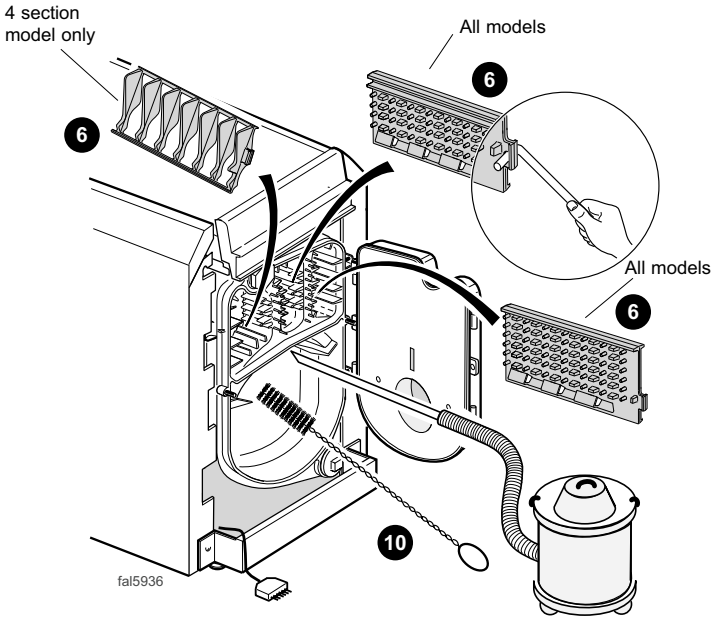

56 SYSTEM MAINTENANCE

Water Level

Check the water level in the installation regularly, and if necessary top it up without allowing a sudden inlet of cold water into the hot boiler.

The operation should only be necessary a few times per season; if it has to be done more frequently, there is probably a leak which should be found and corrected without delay.

Safety Devices

Check that safety devices, and particularly the heating circuit safety valve, are working correctly at regular intervals, and at least when the boiler is cleaned.

Draining

It is recommended that an installation should not be emptied unless absolutely necessary.

For example: when leaving for several months and/or there is a risk of frost in the building.

57 SAFETY

For boilers with gas burners

It is the law that any service work must be carried out by a registered CORGI installer.

WARNING. Always turn off the gas supply at the gas service cock, and switch off and disconnect the electricity supply to the appliance and any external controls before servicing.

IMPORTANT. After completing the servicing or replacement of components always:

- Test for gas soundness
- Check the water system is correctly filled and free of air. Air in the boiler could cause damage to the heat exchanger.
- With the system hot examine all water connections for soundness.
- Check the gas rate and measure the combustion CO/CO_2 content.
- Complete the boiler log book.
- Carry out functional checks as appropriate.

58 SERVICING SCHEDULE

To ensure the continued safe and efficient operation of the appliance it is recommended that it is checked at regular intervals and serviced as necessary. The frequency of servicing will depend upon the installation condition and usage but should be carried out at least annually.

Caradon Ideal Limited does not accept any liability resulting from the use of unauthorised parts or the repair and servicing of appliances not carried out in accordance with the Company's recommendations and specifications.

1. Light the boiler and carry out function checks, noting any operational faults.
2. Run the boiler for 10 minutes and then check the burner rate.
3. Optional test for gas fired boilers - Connect a suitable gas analyser to the sampling point fitted in the flue adapter. For correct boiler operation the CO/CO_2 ratio of the flue gas should not be greater than 0.004 ratio. If this is the case and the gas input is at least 90% of the nominal, no further action need be taken. If not proceed to 4.
4. Remove and clean the burner.
5. Inspect the heat exchanger through the burner opening. Clean the flueways.
6. Check that the flue terminal is unobstructed and that the flue system is sealed correctly.
7. After completion of servicing refer to previous frame for reference to final safety checks.

NOTES

NOTES

Technical Training

The Ideal Boilers Technical Training Centre offers a series of first class training courses for domestic, commercial and industrial heating installers, engineers and system specifiers. For details of courses please ring: 01482 498 432

Ideal Boilers, P.O. Box 103, National Ave, Kingston upon Hull, HU5 4JN. Telephone: 01482 492 251 Fax: 01482 448 858. Registration No. London 322 137.

Caradon Ideal Limited pursues a policy of continuing improvement in the design and performance of its products. The right is therefore reserved to vary specification without notice.

BOILERS Ideal

ENGINEERED FOR PEACE OF MIND

March 2003 UIN 153 266 A03

Caradon

Ideal Limited

Ideal Installer/Technical Helpline: 01482 498 376

www.idealboilers.com